HDC302x 0.5%RH Digital Relative Humidity Sensor, 0.19%RH/yr Long Term Drift, 4s Response, Low-Power, Offset Error Correction, 0.1°C Temperature Sensor

1 Features

- Relative humidity (RH) sensor:
  - Operating range: 0% to 100%
  - Accuracy: ±0.5% typical
  - Offset Error Correction: reduces offset to return device to within accuracy specification
  - Long-term drift: 0.19%RH/yr
  - Condensation protection with integrated heater
- Temperature sensor:
  - Operating range: –40°C to 125°C
  - Accuracy: ±0.1°C typical
  - Long-term drift: ±0.03°C/yr
- NIST traceability: relative humidity & temperature
- Output Short Circuit Protection
- Low power: average current 0.4µA
- I^2C interface compatibility up to 1MHz speeds
  - Four selectable I^2C addresses
  - Data protection through CRC checksum
- Supply voltage: 1.62V to 5.50V
- Available auto measurement mode
- Programmable interrupts
- Programmable RH and Temp measurement offset
- Factory-installed polyimide tape assembly cover
- Factory-installed IP67 rated environmental cover

2 Applications

- Washer & dryer
- Refrigerator & freezer
- Industrial transport
- Cold Chain asset tracking & data logger
- IoT environmental sensors
- Air quality and gas detection
- Humidifier/dehumidifier
- Thermostat
- CPAP and ventilator
- Water leak detector
- IP Camera

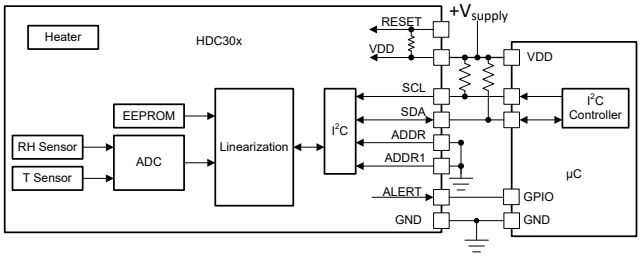

Typical Application

3 Description

The HDC302x is an integrated, capacitive based relative humidity (RH) and temperature sensor . The device provides high accuracy measurements over a wide supply range (1.62V – 5.5V) and ultra low power consumption in a compact 2.5mm × 2.5mm × 0.8mm WSON 8-pin package. Both the temperature and humidity sensors are 100% tested and trimmed on a production setup that is NIST traceable and verified with equipment that is calibrated to ISO/IEC 17025 standards.

Offset Error Correction reduces RH sensor offset due to aging, exposure to extreme operating conditions, and contaminants to return device to within accuracy specifications. For battery IoT applications, auto measurement mode and ALERT feature enable low system power by maximizing MCU sleep time. There are four different I^2C addresses that support speeds up to 1MHz. A heater is available to dissipate condensation and moisture.

The HDC3020 is an open cavity package without protective cover. Two device variants have a cover option to protect the open cavity RH sensor: HDC3021 and HDC3022. HDC3021 has removable protective tape to allow conformal coatings and PCB wash. HDC3022 has a permanent IP67 filter membrane to protect against dust and water condensation.

Package Information

PART NUMBER	PACKAGE(1)	PACKAGE SIZE(2)
HDC3020 HDC3021 HDC3022	WSON (8)	2.50mm × 2.50mm

(1) For more information, see Section 11.
(2) The package size (length × width) is a nominal value and includes pins, where applicable.

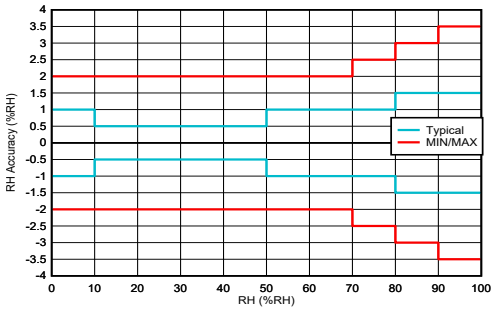

Relative Humidity (%RH) Accuracy

An IMPORTANT NOTICE at the end of this data sheet addresses availability, warranty, changes, use in safety-critical applications, intellectual property matters and other important disclaimers. PRODUCTION DATA.

Table of Contents

1 Features....1
2 Applications....1
3 Description....1
4 Device Comparison....3
5 Pin Configuration and Functions....4
6 Specifications....5
6.1 Absolute Maximum Ratings....5
6.2 ESD Ratings....5
6.3 Recommended Operating Conditions....5
6.4 Thermal Information....5
6.5 Electrical Characteristics....6
6.6 I^2C Interface Timing....9
6.7 Timing Diagram....9
6.8 Typical Characteristics....10
7 Detailed Description....12
7.1 Overview....12
7.2 Functional Block Diagram....12
7.3 Feature Description....12
7.4 Device Functional Modes....15
7.5 Communication....15
8 Application and Implementation....33
8.1 Application Information....33
8.2 Typical Application....33
8.3 Power Supply Recommendations....36
8.4 Layout....36
9 Device and Documentation Support....39
9.1 Documentation Support....39
9.2 Receiving Notification of Documentation Updates....39
9.3 Support Resources....39
9.4 Trademarks....39
9.5 Electrostatic Discharge Caution....39
9.6 Glossary....39
10 Revision History....39
11 Mechanical, Packaging, and Orderable Information....40

Copyright © 2024 Texas Instruments Incorporated

4 Device Comparison

Table 4-1. TI Humidity Device Comparison

	HDC302x	HDC312x	HDC2010	HDC2080	HDC1010	HDC1080
Operating Temp. (°C)	-40 to 125	-40 to 125	-40 to 85	-40 to 125	-40 to 85	-40 to 125
Interface; Address Count	I2C; 4	Ratiometric Analog; N/A	I2C; 2		I2C; 1	
RH Accuracy (typical/max) (%RH)	±0.5/±2.0, 10%-50% RH ±1.0/±2.0, 10%-70% RH ±1.0/±2.5, 10%-80% RH ±1.5/±3.0, 10%-90% RH	±0.5/±2.0, 10%-50% RH ±1.0/±2.0, 10%-70% RH ±1.0/±2.5, 10%-80% RH ±1.5/±3.0, 10%-90% RH	±2/±3, 20%-80% RH		±2, 10-80%RH	±2, 20-60%RH
RH Repeatability (%, typical)	±0.02	±0.02	±0.1, 14-bit resolution		±0.1, 14-bit resolution	
RH LTD (%/yr, typical)	±0.19	±0.19	±0.25		±0.25	
RH Response Time (secs, typical)	4	4	8		15	
Temperature Accuracy (typical/ max) (°C)	±0.1 / ±0.2, 0°C – 50°C ±0.1 / ±0.3, -40°C – 100°C ±0.1 / ±0.4, -40°C – 125°C	±0.1 / ±0.2, 0°C – 50°C ±0.1 / ±0.3, -40°C – 100°C ±0.1 / ±0.4, -40°C – 125°C	±0.2/±0.4, 15°C–45°C ±0.2 / ±0.7, 5°C – 60°C	±0.2/±0.4, 10°C–35°C ±0.2 / ±0.7, 5°C – 60°C	±0.2 / ±0.4, 5°C – 60°C	
Sleep Current (µA, typical)	0.4 (trigger on demand) 0.55 (auto measure)	200	0.05		0.1	
Active Current (µA, typical)	99	N/A	650		190	
Average I_{DD} (typical at 1Hz)	0.7 (trigger on demand), 0.9 (auto measure)	N/A	0.55		0.71	
NIST Traceability	Yes	Yes	No		No	
Protective Options	HDC3021: Protective Tape HDC3022: IP67 Filter	No[1]	No	HDC2021: Protective Tape HDC2022: IP67 Filter	No	
Integrated Heater	Yes	Yes	Yes			
Package Size (mm^3)	2.5×2.5×0.8	2.5×2.5×0.8	1.5×1.5×0.675	3×3×0.8	2×1.6×0.675	3×3×0.8

5 Pin Configuration and Functions

Figure 5-1. HDC302x DEF, DEH, DEJ Package 8-Pin WSON Transparent Top View

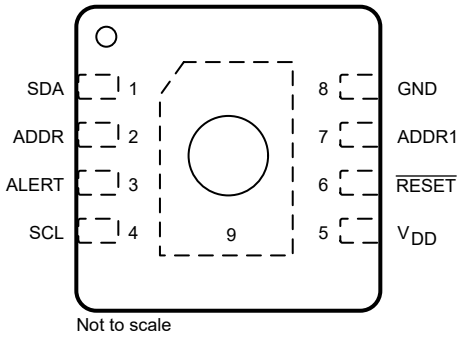

Table 5-1. Pin Functions

PIN		TYPE[1]	DESCRIPTION
NAME	NO.		
ADDR	2	I	I^2C Device Address Pin. For device addresses 0x44 and 0x45, ADDR1 voltage must be GND. 0x44 requires ADDR voltage to be GND. 0x45 requires ADDR voltage to be VDD. Can not be left floating.
ADDR1	7	I	I^2C Device Address Pin. For device addresses 0x46 and 0x47, ADDR1 voltage must be VDD. 0x46 requires ADDR voltage to be GND. 0x47 requires ADDR voltage to be VDD. Can not be left floating.
ALERT	3	O	Interrupt Pin. Push-Pull Output. If not used, must be left floating.
GND	8	G	Ground
$\overline{\text{RESET}}$	6	I	Reset Pin. Active Low, internal pull-up resistor to VDD. If not used, tie to V_{DD}.
SCL	4	I	Serial clock line for I^2C.
SDA	1	I/O	Serial data line for I^2C, open-drain; requires a pullup resistor.
V_{DD}	5	P	Supply voltage from 1.62 V to 5.50 V.
Thermal Pad	9	G	The thermal pad can be soldered, or left unsoldered. If choosing to solder the thermal pad, attach to a pad that is connected to GND, or preferably a floating pad. To minimize thermal mass for maximum heater efficiency or to measure ambient temperature, however, the thermal pad can be left unconnected to the PCB.

(1) I/O = Input and Output, G = Ground, I = Input, O = Output, P = Power

Copyright © 2024 Texas Instruments Incorporated

6 Specifications

6.1 Absolute Maximum Ratings

Over operating free-air temperature range (unless otherwise noted)[1]

		MIN	MAX	UNIT
V_{DD}	Applied Voltage on VDD pin	–0.3	6.0	V
SCL	Applied Voltage on SCL pin	–0.3	6.0	V
SDA	Applied Voltage on SDA pin	–0.3	6.0	V
ADDR	Applied Voltage on ADDR pin	–0.3	6.0	V
ADDR1	Applied Voltage on ADDR1 pin	–0.3	V_{DD} + 0.3	V
ALERT	Applied Voltage on ALERT pin	–0.3	V_{DD} + 0.3	V
$\overline{RESET}$	Applied Voltage on $\overline{RESET}$ pin	–0.3	V_{DD} + 0.3	V
T_J	Junction temperature	–55	150	°C
T_{stg}	Storage temperature	–65	150	°C

(1) Operation outside the Absolute Maximum Ratings may cause permanent device damage. Absolute Maximum Ratings do not imply functional operation of the device at these or any other conditions beyond those listed under Recommended Operating Conditions. If used outside the Recommended Operating Conditions but within the Absolute Maximum Ratings, the device may not be fully functional, and this may affect device reliability, functionality, performance, and shorten the device lifetime.

6.2 ESD Ratings

			VALUE	UNIT
$V_{(ESD)}$	Electrostatic discharge	Human body model (HBM), per ANSI/ESDA/JEDEC JS-001[1]	±2000	V
		Charged device model (CDM), per JEDEC specification JS-002[2]	±750	

(1) JEDEC document JEP155 states that 500-V HBM allows safe manufacturing with a standard ESD control process
(2) JEDEC document JEP157 states that 250-V CDM allows safe manufacturing with a standard ESD control process

6.3 Recommended Operating Conditions

PARAMETER		MIN	MAX	UNIT
V_{DD}	Supply voltage	1.62	5.5	V
T_{TEMP}	Temperature Sensor - Operating free-air temperature	–40	125	°C
T_{RH}	Relative Humidity Sensor - Operating free-air temperature	–20	80	°C
T_{HEATER}	Integrated Heater for condensation removal - Operating free-air temperature[1]	–40	60	°C
RH_{OR}	Relative Humidity Sensor Operating Range (Non-condensing) [1]	0	100	%RH

(1) Prolonged operation outside the recommended temperature operating conditions and/or at >80%RH with temperature in the higher recommended operating range can result in a shift of sensor reading, with slow recovery time. Note care needs to be taken when measuring RH at <0°C due to potential for frost. See Exposure to High Temperature and High Humidity Conditions for more details.

6.4 Thermal Information

THERMAL METRIC[1]		HDC3x DEF, DEH, and DEJ (WSON) 8 PINS	UNIT
$R_{\theta JA}$	Junction-to-ambient thermal resistance	84.9	°C/W
$R_{\theta JC(top)}$	Junction-to-case (top) thermal resistance[2]	N/A	°C/W
$R_{\theta JB}$	Junction-to-board thermal resistance	52.0	°C/W
Ψ_{JT}	Junction-to-top characterization parameter[2]	N/A	°C/W
Ψ_{JB}	Junction-to-board characterization parameter	51.7	°C/W

Copyright © 2024 Texas Instruments Incorporated

THERMAL METRIC[1]		HDC3x DEF, DEH, and DEJ (WSON) 8 PINS	UNIT
$R_{\theta JC(bot)}$	Junction-to-case (bottom) thermal resistance	30.4	°C/W

(1) For more information about traditional and new thermal metrics, see the Semiconductor and IC Package Thermal Metrics application note.
(2) JEDEC standard JESD51-X specifies this measurement at the center position on the top surface of the package. Due to the location of the cavity opening at the center position, this measurement is not applicable.

6.5 Electrical Characteristics

T_A = -40°C to 125°C, V_{DD} = 1.62V to 5.50V (unless otherwise noted), Typical Specifications are T_A = 25°C, V_{DD} = 1.8V unless otherwise noted

PARAMETER		TEST CONDITIONS	MIN	TYP	MAX	UNIT
Relative Humidity Sensor						
RH_{ACC}	Accuracy [3] [4]	T_A = 25°C, 10% to 50% RH		±0.5	±2.0	%RH
		T_A = 25°C, 0% to 70% RH		±1.0	±2.0	
		T_A = 25°C, 10% to 80% RH		±1.0	±2.5	
		T_A = 25°C, 10% to 90% RH		±1.5	±3.0	
		T_A = 25°C, 0% to 100% RH		±1.5	±3.5	
RH_{REP}	Repeatability[12]	Low Power Mode 0 (lowest noise)		±0.02		%RH
		Low Power Mode 1		±0.02		
		Low Power Mode 2		±0.03		
		Low Power Mode 3 (lowest power)		±0.04		
RH_{HYS}	Hysteresis[5]	10% to 90% RH		±0.8		%RH
RH_{RT}	Response Time[6] [7]	10% to 90% RH $t_{63\%}$ step.		4		s
RH_{LTD}	Long-term Drift[4]			0.19		%RH/yr
RH_{PSRR}	Supply Sensitivity RH accuiracy	V_{DD} = 1.8V to 5.5V	–10	1.8	10	%mRH/V
Temperature Sensor						
T_{ACC}	Accuracy	0°C ≤ T_A ≤ 50°C		±0.1	±0.2	°C
		-40°C ≤ T_A ≤ 100°C		±0.1	±0.3	
		-40°C ≤ T_A < 125°C		±0.1	±0.4	
T_{REP}	Repeatability[12]	Low Power Mode 0 (lowest noise)		±0.04		°C
		Low Power Mode 1		±0.05		
		Low Power Mode 2		±0.06		
		Low Power Mode 3 (lowest power)		±0.08		
T_{RT}	Response Time (stirred liquid) [6] [13]	25C <$T_{A<}$ 75C $t_{63\%}$ step Roger's 4350B PCB 1.575mm thickness		2		s
T_{LTD}	Long Term Drift				±0.03	°C/yr
T_{PSRR}	Supply Sensitivity Temperature accuracy		–25	-5.7	25	m°C/V
Sensor Timing						
t_{meas}	Measurement Duration[8]	Low Power Mode 0 (lowest noise)		12.5	14.1	ms
		Low Power Mode 1		7.5	8.4	
		Low Power Mode 2		5.0	5.7	
		Low Power Mode 3 (lowest power)		3.7	4.2	
SCL, SDA Pins						

Copyright © 2024 Texas Instruments Incorporated

T_A = -40°C to 125°C, V_{DD} = 1.62V to 5.50V (unless otherwise noted), Typical Specifications are T_A = 25°C, V_{DD} = 1.8V unless otherwise noted

PARAMETER		TEST CONDITIONS	MIN	TYP	MAX	UNIT
V_{IL}	LOW-level input voltage				0.3*V_{DD}	V
V_{IH}	HIGH-level input voltage		0.7*V_{DD}			V
V_{OL}	LOW-level output voltage	I_{OL} = 3 mA			0.4	V
I_{IN}	Input leakage current	SDA and SCL pins	–0.5		0.5	µA
C_{IN}	Input Capacitance			4.5		pF
Control Pins						
V_{OH}	High-level Output Voltage - ALERT	I_{OH} = -100 µA	V_{DD}–0.2			V
	High-level Output Voltage - ALERT	I_{OH} = -3 mA	V_{DD}–0.4			V
V_{OL}	Low-level Output Voltage - ALERT	I_{OL} = 100 µA			0.2	V
	Low-level Output Voltage - ALERT	I_{OL} = 3 mA			0.4	V
V_{IH}	High Level Input Voltage - ADDR, ADDR1, $\overline{\text{RESET}}$		0.7*V_{DD}			V
V_{IL}	Low Level Input Voltage - ADDR, ADDR1, $\overline{\text{RESET}}$				0.3*V_{DD}	V
I_I	Input Leakage Current - ADDR and ADDR1	V_I = V_{DD} or GND	-0.5		0.5	µA
Power Supply						
I_{DD_ACTIVE}	Active Current[(1)]	Low Power Mode 0 (lowest noise)		110	170	µA
		Low Power Mode 1		108	165	
		Low Power Mode 2		103	155	
		Low Power Mode 3 (lowest power)		99	153	
	Sleep Current[(1)]	No Active Measurement, trigger on demand mode T_A = 25°C		0.36	0.75	
I_{DD_SLEEP}		No Active Measurement, trigger on demand mode T_A = -40°C to 125°C			14.5	µA
		No Active Measurement, auto measurement mode T_A = 25°C		0.54	1.05	
		No Active Measurement, auto measurement mode T_A = -40°C to 125°C			15.0	
$I_{DD_AVG_EQN}$	Averaged Current Equation	measurement freq = numbers of samples per second		see [(9)]		

T_A = -40°C to 125°C, V_{DD} = 1.62V to 5.50V (unless otherwise noted), Typical Specifications are T_A = 25°C, V_{DD} = 1.8V unless otherwise noted

PARAMETER		TEST CONDITIONS	MIN	TYP	MAX	UNIT
I_{DD_AVG}	Averaged Current(1) (2)	trigger on demand mode, low Power Mode 3 (lowest Power) triggered at 1 sample per second		0.7		µA
		trigger on demand mode, low Power Mode 3 (lowest Power) triggered at 1 sample per 5 seconds		0.4		
		automeasurement mode, Low Power Mode 0 (lowest noise) 1 sample per second		1.9		
		automeasurement mode, Low Power Mode 1 1 sample per second		1.3		
		automeasurement mode, Low Power Mode 2 1 sample per second		1.0		
		automeasurement mode, low Power Mode 3 (lowest power) 1 sample per second		0.9		
		automeasurement mode, Low Power Mode 3 (lowest power) 1 sample every two seconds		0.7		
P_{HEATER}	Heater Power (11)	Full Power 0x3FFF, V_{DD} = 3.3V		249	368	mW
		Half Power 0x03FF, V_{DD} = 3.3V		137	203	
		Quarter Power 0x009F, V_{DD} = 3.3V		67	100	
V_{POR}	Power on reset threshold voltage	supply rising		1.35		V
V_{BOR}	Brown out detect voltage	supply falling		1.19		V
$Sensor_{PUR}$	Power Up Ready	Sensor ready once V_{DD} ≥ 1.62V		3.5	5.0	ms
$Sensor_{RR}$	Reset Ready	Sensor ready after a reset		1.3	3.0	ms
$R_{\overline{RESET}}$	$\overline{RESET}$ pin internal pull up resistance			49		kΩ
$t_{\overline{RESET}_NPW}$	Negative pulse width to trigger hard reset		1			µS
EEPROM (T, RH offset, and alert)						
OS_{END}	Program Endurance		1000	50000		Cycles
OS_{RET}	Data Retention Time	100% Power-On hours	10	100		Years
t_{PROG}	EEPROM Programming Time			53	77	ms
I_{EEPROM}	EEPROM write quiescent current	No active measurement; serial bus inactive		525		µA

(1) Does not include I^2C read/write communication or pullup resistor current through SCL and SDA
(2) Average current consumption while conversion is in progress
(3) Excludes hysteresis and long-term drift
(4) Based on THB (temperature humidity bias) testing using Arrhenius-Peck acceleration model. Excludes the impact of dust, gas phase solvents and other contaminents such as vapors from packaging materials, adhesives, or tapes, and more.
(5) The hysteresis value is the difference between the RH measurement in a rising and falling RH environment, at a specific RH point
(6) Actual response times varies dependent on system thermal mass and air-flow
(7) Time for the RH output to change by 63% of the total RH change after a step change in environmental humidity
(8) Measurement duration includes the time to measure RH plus Temp
(9) $I_{DD_AVG_EQN}$ = measurement freq x I_{DD_ACTIVE} x t_{meas}+ I_{sleep} x (1- (measurement freq x t_{meas}));
verify that units match, for example, that measurement frequency in Hz, t_{meas} in seconds, and all the currents in the same unit
(10) Time for the T output to change by 63% of the total T change after a step change in environmental temperature
(11) More details on the heater can be found in the HDC3x Silicon User's Guide
(12) Typical Values are a 3-sigma measurement over both temperature and supply voltage.

Copyright © 2024 Texas Instruments Incorporated

6.6 I²C Interface Timing

minimum and maximum specifications are over –40 °C to 125 °C and V_{DD} = 1.62V to 5.50V (unless otherwise noted)[1]

Parameter		FAST MODE		FAST MODE PLUS		UNIT
		MIN	MAX	MIN	MAX	
$f_{(SCL)}$	SCL operating frequency	1	400	1	1000	kHz
$t_{(BUF)}$	Bus-free time between STOP and START conditions	1.3		0.5		µs
$t_{(SUSTA)}$	Repeated START condition setup time	0.6		0.26		µs
$t_{(HDSTA)}$	Hold time after repeated START condition. After this period, the first clock is generated.	0.6		0.26		µs
$t_{(SUSTO)}$	STOP condition setup time	0.6		0.26		µs
$t_{(HDDAT)}$	Data hold time[2]	0	900	0	150	ns
$t_{(SUDAT)}$	Data setup time	100		50		ns
$t_{(LOW)}$	SCL clock low period	1.3		0.5		µs
$t_{(HIGH)}$	SCL clock high period	0.6		0.26		µs
$t_{(VDAT)}$	Data valid time (data response time)[3]		0.9		0.45	µs
t_R	SDA, SCL rise time	20	300		120	ns
t_F	SDA, SCL fall time	20 x (V_{DD} / 5.5 V)	300	20 x (V_{DD} / 5.5 V)	120	ns
t_{LPF}	Glitch suppression filter	50		50		ns

(1) The controller and device have the same V_{DD} value.
(2) The maximum $t_{(HDDAT)}$ can be 0.9 µs for fast mode, and is less than the maximum $t_{(VDAT)}$ by a transition time.
(3) $t_{(VDAT)}$ = time for data signal from SCL LOW to SDA output (HIGH to LOW, depending on which is worse).

6.7 Timing Diagram

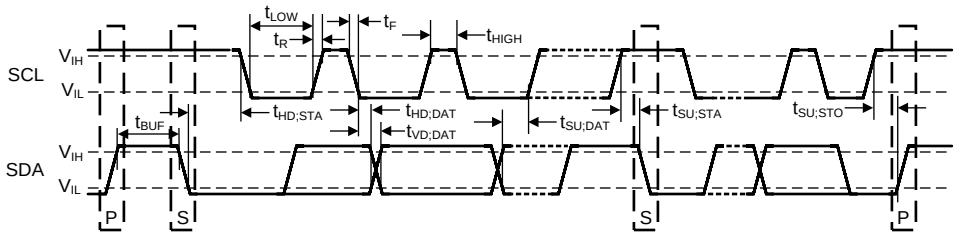

Figure 6-1. HDC302x I²C Timing Diagram

6.8 Typical Characteristics

Unless otherwise noted. T_A = 25°C, V_{DD} = 1.80 V.

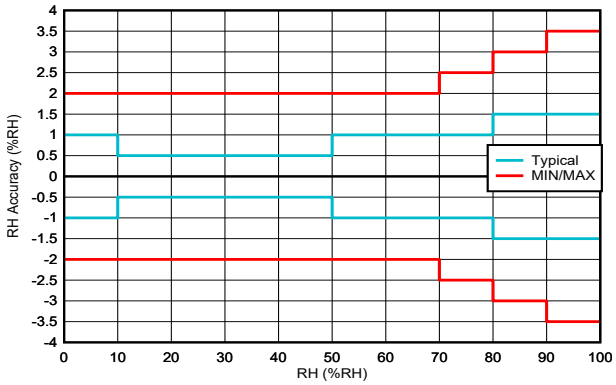

Figure 6-2. RH Accuracy vs RH

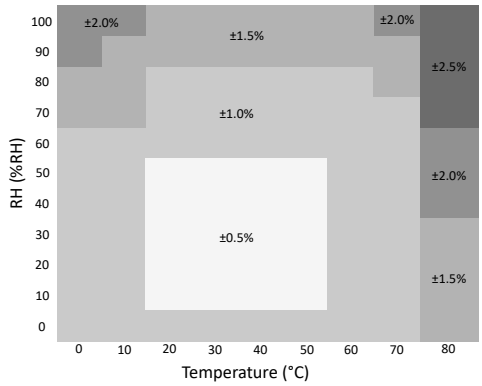

Figure 6-3. Typical RH Accuracy Across RH and Temperature

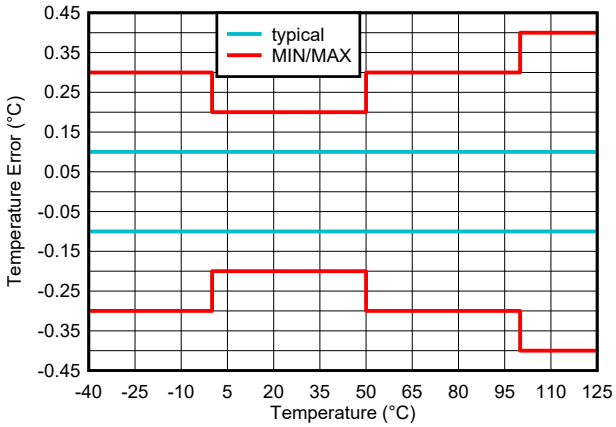

Figure 6-4. Temperature Accuracy vs Temperature

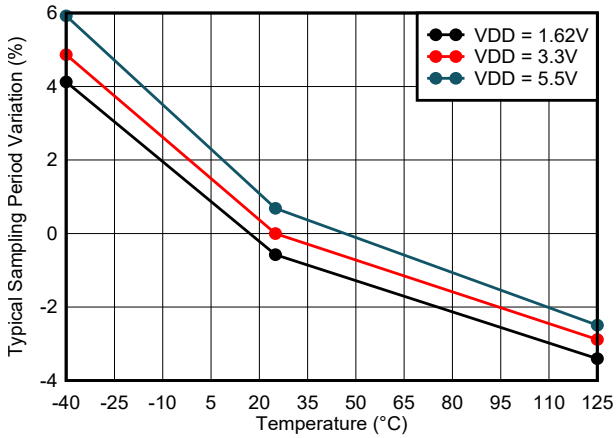

Figure 6-5. Auto Sampling Timing Variation

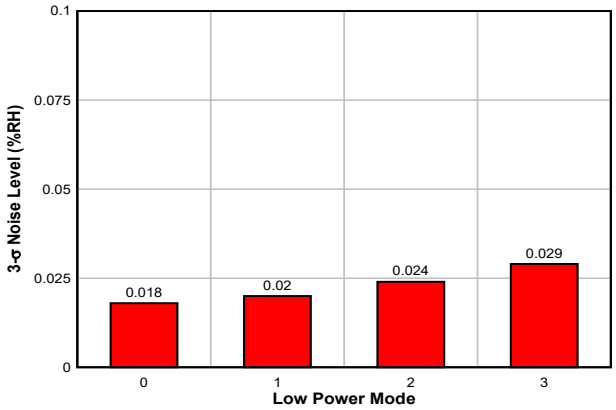

Figure 6-6. Typical RH Noise Across Low Power Modes

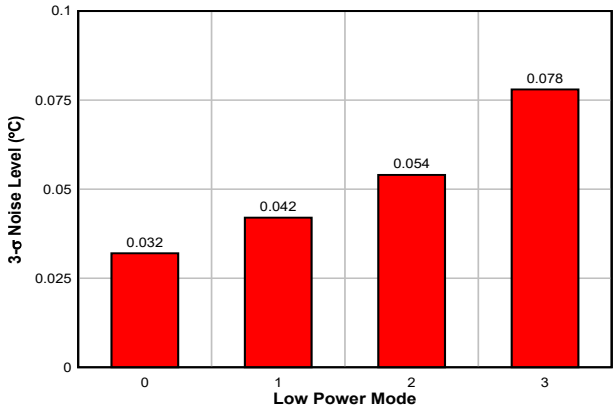

Figure 6-7. Typical Temperature Noise Across Low Power Modes

Copyright © 2024 Texas Instruments Incorporated

6.8 Typical Characteristics (continued)

Unless otherwise noted. T_A = 25°C, V_{DD} = 1.80 V.

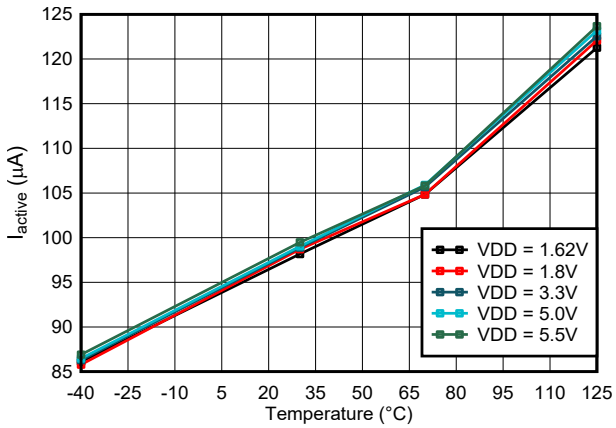

Figure 6-8. I_{active} vs Temperature Across Supply Voltages

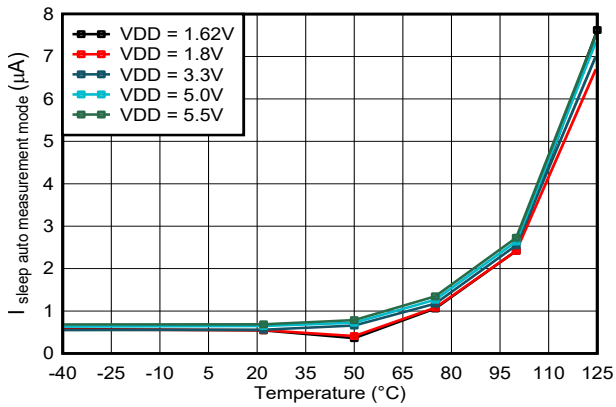

Figure 6-9. I_{sleep} Auto Measurement Mode across Temperature and Supply

7 Detailed Description

7.1 Overview

The HDC302x is an integrated interface digital sensor that incorporates both humidity-sensing and temperature-sensing elements, an analog-to-digital converter, calibration memory, and an I^2C compatible interface in a 2.50mm × 2.50mm, 8-pin WSON package. The HDC302x also provides excellent measurement accuracy at very low power.

The HDC302x measures relative humidity through variations in the capacitance of a polymer dielectric. As with most relative humidity sensors that include this type of technology, care must be taken to provide optimal device performance. This includes:

- Follow the correct storage and handling procedures during board assembly. Also avoid exposure to outgassing substances such as pink storage foam, chemicals such acetone ethylene glycol, and more. See *HDC3x Silicon User's Guide* for these guidelines.
- Protect the sensor from contaminants during board assembly and operation. If that is not possible, digital versions are available with protective cover options:
  - HDC3021 has removable protective tape to allow conformal coatings and PCB wash during assembly.
  - HDC3022 has a permanent IP67 filter membrane to protect against dust and condensation
- Reduce prolonged exposure to both high temperature and humidity extremes that can impact sensor accuracy.
- Follow the correct layout guidelines for best performance. See *Optimizing Placement and Routing for Humidity Sensors* for these guidelines.

7.2 Functional Block Diagram

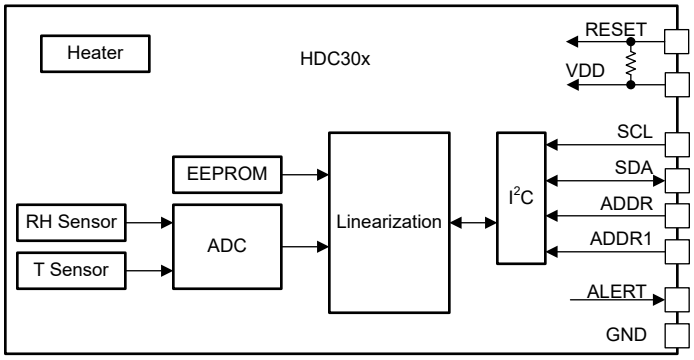

7.3 Feature Description

7.3.1 Factory Installed Polyimide Tape

The HDC3021 has a polyimide tape to cover the opening of the humidity sensor element. The tape protects the humidity sensor element from pollutants that can be produced as part of the manufacturing process, such as SMT assembly, printed circuit board (PCB) wash, and conformal coating. The tape must be removed after the final stages of assembly for accurate measurement of relative humidity in the ambient environment. The tape can withstand at least three standard reflow cycles.

To remove the polyimide tape from the humidity sensor element, TI recommends to use ESD-safe tweezers to grip the adhesive-free tab in the top right corner, and slowly peel the adhesive from the top-right corner towards the bottom-left corner in an upward direction (as opposed to across the surface). This practice helps to reduce the risk of scratching the humidity sensor element.

7.3.2 Factory Installed IP67 Protection Cover

HDC3022 has an IP67 rated PTFE permanent filter to cover the opening of the humidity sensor element. The cover is a hydrophobic microporous PTFE foil that protects the humidity sensor element against dust, water and PCB wash according to IP67 specifications. The cover is designed to adhere to the package over lifetime

Copyright © 2024 Texas Instruments Incorporated

operation while maintaining the same response time as a sensor without the membrane. The cover has a filtration efficiency of 99.99% down to a particle size of 100 nm.

7.3.3 Measurement of Relative Humidity and Temperature

The HDC302x supports measurements of Relative Humidity and Temperature. The supported Relative Humidity Range is 0% to 100% and the supported Temperature Range is from –40°C to 125°C. Each measurement is represented in a 16-bit format, the device cannot report Temperature and Relative Humidity outside the reported range, and the conversion formulas are documented below:

$$\mathrm{RH}(\%) = 100 \times \left[\frac{\mathrm{RH}_{\mathrm{HDC302x}}}{2^{16} - 1}\right] \tag{1}$$

$$\mathrm{T}(^{\circ}\mathrm{C}) = -45 + \left[175 \times \left(\frac{\mathrm{T}_{\mathrm{HDC302x}}}{2^{16} - 1}\right)\right] \tag{2}$$

$$\mathrm{T}(^{\circ}\mathrm{F}) = -49 + \left[315 \times \left(\frac{\mathrm{T}_{\mathrm{HDC302x}}}{2^{16} - 1}\right)\right] \tag{3}$$

7.3.4 RH Offset Error Correction: Accuracy Restoration

Due to contaminants, the natural aging of the polymer dielectric of the sensor, and exposure to extreme operating conditions resulting in long-term drift. The integrated heater in the device can be used to reduce RH offset, and remove condensation off the device. In addition to RH offset correction, temperature also has an offset correction register. Normally, RH readings are dependent on the temperature readings. However, if a digital offset is applied to temperature, that change in temperature does not change the RH readings.

7.3.5 NIST Traceability of Relative Humidity and Temperature Sensor

The HDC302x units are 100% tested on a production setup that is NIST traceable and verified with equipment that is calibrated to ISO/IEC 17025 accredited standards. This permits design of the HDC302x into applications such as cold chain management, where the establishment of an unbroken chain of calibrations to known references is essential.

7.3.6 Measurement Modes: Trigger-On Demand vs Auto Measurement

Two types of measurement modes are available on the HDC302x: Trigger-on Demand and Auto Measurement mode.

Trigger-on Demand is a single measurement reading of temperature and relative humidity that is triggered through an I^2C command on an as-needed basis. After the measurement is converted, the device remains in sleep mode until another I^2C command is received.

Auto Measurement mode is a recurring measurement reading of temperature and relative humidity, eliminating the need to repeatedly initiate a measurement request through an I^2C command. The measurement interval can be adjusted from 1 measurement every 2 seconds to 10 measurements every second. In Auto Measurement mode, the HDC302x wakes up from sleep to measurement mode based on the selected sampling rate.

Auto Measurement mode helps to reduce overall system power consumption in two ways. First, by removing the need to repeatedly initiate a measurement through an I^2C command, sink current through the SCL and SDA pullup resistors is eliminated. Secondly, a microcontroller can be programmed into a deep sleep mode, and only woken up through an interrupt by the ALERT pin in the event of excessive temperature and relative humidity measurements.

7.3.7 Heater

The HDC302x includes an integrated heating element that can be switched on to remove any condensation that can develop when the ambient environment approaches the dew point temperature. Additionally, the heater can be used to verify functionality of the temperature and RH readings.

Copyright © 2024 Texas Instruments Incorporated

If the dew point of an application is continuously calculated and tracked, and the application firmware is written such that the device can detect a potential condensing situation (or a period), a software subroutine can be run, as a precautionary measure, to activate the onboard heater as an attempt to remove the condensate. The device continues to measure and track the %RH level after the heater is activated. Once the %RH reading goes to zero % (or near it), the heater can be subsequently turned off to allow the device to cool down. Cooling of the device can take several minutes, but the temperature measurement continues to run to verify that the device goes back to normal operating condition before restarting the device for normal service.

Note that when the heater activates, the operating temperature of the device shall be limited based on the *Recommended Operating Conditions* T_{HEATER} limits.

If using an open cavity sensor, the integrated heater evaporates condensate that forms on top of the humidity sensor. The heater does not remove any dissolved contaminants, however. Contaminant residue that is present can impact the accuracy of the humidity sensor. Refer to *HDC302x Silicon Users Guide* for more details on condensation removal.

In situations where the HDC3x sensor cavity is covered in a water droplet, and the user wants to use the heater to evaporate the droplet, do not exceed 100°C and do not raise the temperature too fast. This is because ramping the temperature too quickly past 100°C can cause the water droplet to burst, which can damage the polymer in the sensor cavity. A heater temp rise to 100°C from ambient temp must take between 5 to 10 seconds to be safe. There is no concern with exceeding 100°C for a short period of time in a non-condensing environment.

7.3.8 ALERT Output With Programmable Interrupts

Use the ALERT output pin to determine if the HDC302x records a measurement that indicates either the temperature or relative humidity result is outside of a programmed "comfort zone". The pin sends a hardware interrupt based on the programmable non-volatile thresholds for both temperature and humidity. Note that the ALERT pin is a powerful push-pull output, so caution must be taken to avoid large currents flowing in and out of the ALERT pin to avoid the sensor self-heating. Self-heating increases the temperature of the sensor, and this causes RH to drop noticeably.

The ALERT output pin serves to drive circuit blocks where software monitoring is not feasible. Examples include enabling a power switch to start a dehumidifier, or to initiate a thermal shutdown. Additionally, the ALERT pin can minimize power drain by enabling a microcontroller to remain in deep sleep until environmental conditions require the microcontroller to wake up and perform debug and corrective actions.

7.3.9 Checksum Calculation

Error checking of data is supported with a Checksum Calculation, and the reliability of data communication is supported by sending a checksum byte with every 2 bytes of data. The 8-bit CRC checksum transmitted after each data word is generated by a CRC algorithm. Table 7-1 shows the CRC properties. The CRC covers the contents of the two previously transmitted data bytes. To calculate the checksum, only these two previously transmitted data bytes are used.

A CRC byte is sent by the HDC302x to the I^2C controller in the following cases:

1. Following the transmission of a relative humidity measurement
2. Following the transmission of a temperature measurement
3. Following the transmission of the status register
4. Following the transmission of any of the programmed ALERT limit values (High Alert, Set; High Alert, Clear; Low Alert, Set; Low Alert, Clear)

A CRC byte must be sent by the I^2C controller to the HDC302x in the following cases:

1. Following the configuration of any of the ALERT limit values (High Alert, Set; High Alert, Clear; Low Alert, Set; Low Alert, Clear).
2. Following the configuring the heater.
3. Following writing an offset into the part.

Copyright © 2024 Texas Instruments Incorporated

Table 7-1. HDC302x CRC Properties

PROPERTY	VALUE
Name	CRC-8/NRSC-5
Width	8 bit
Protected Data	Read Data, Write Data, or Both
Polynomial	0x31 ($x^8 + x^5 + x^4 + 1$)
Initialization	0xFF
Reflect Input	False
Reflect Output	False
Final XOR	0x00
Examples	CRC of 0xABCD = 0x6F

Retrieving the CRC byte from the HDC302x is required. A NACK cannot be issued by the I²C controller prior to reception of the CRC byte to cancel. Example code with how to calculate CRC along with all other HDC302x communications is available on ASC Studio.

7.3.10 Programmable Offset of Relative Humidity and Temperature Results

HDC302x allows for the user to program a non-volatile offset value for relative humidity and temperature. The offset value can only be used to add or subtract from the sensor measurement results. Adding or subtracting an offset to humidity or temperature does not affect the results of the other. For example, normally as temperature increases humidity subsequently drops for a fixed amount of water vapor in the air. However, if the user applies an offset to the temperature result, that does not affect the humidity reading.

7.4 Device Functional Modes

The HDC302x has two modes of operation: Sleep Mode and Measurement Mode.

7.4.1 Sleep Mode vs Measurement Mode

Sleep mode is the manufacturer set default mode of the HDC302x upon Power Up, Hard Reset through the $\overline{\text{RESET}}$ pin, and Soft Reset (this power up mode can be reprogrammed, described in Section 7.5.7.3.5). The HDC302x waits for an I²C instruction to trigger a measurement, or to read and write valid data. A measurement request triggers the HDC302x to switch to measurement mode, where measurements from the integrated sensors are passed through an internal ADC, and go through linearization using proprietary methods from within the device to produce accurate calculations of temperature and relative humidity. The results are stored in the respective data registers. After completing the conversion, the HDC302x returns to sleep mode. The user must return the device to sleep mode to run the heater, and program the EEPROM. Both trigger-on-demand and automatic measurements are considered to be measurement mode. In measurement mode, temperature and humidity data is only available to be read by the controller once. Any following attempts to read temperature and humidity results produces the minimum temperature and humidity values.

7.5 Communication

7.5.1 I²C Interface

The HDC302x operates only as a target device on the I²C bus. Multiple devices on the same I²C bus with the same address are not allowed. Connection to the bus is made through SCL and the open-drain I/O line, SDA. After power up, the sensor needs the sensor power-up ready time, $Sensor_{PUR}$, before the sensor can begin the acquisition of temperature and relative humidity measurements. All data bytes are transmitted MSB first. The I²C bus voltage can be different than the device VDD. To prevent self heating in the device, verifying that the I²C bus voltage is equal or greater to VDD is recommended.

7.5.2 I²C Serial Bus Address Configuration

An I²C controller communicates to a desired target device through a target address byte. The target address byte consists of seven address bits and a direction bit that indicates the intent to execute a read or write

operation. The HDC302x features two address pins, which allows for supporting four addressable HDC302x devices on a single I²C bus. Table 7-2 describes the pin logic levels used to communicate up to four devices.

Table 7-2. HDC302x I²C Device Address

ADDR	ADDR1	ADDRESS (7-bit Hex Representation)
GND	GND	0x44
GND	VDD	0x46
VDD	GND	0x45
VDD	VDD	0x47

7.5.3 I²C Write - Send Device Command

Communication to the HDC302x is based upon a command list, which is documented in Table 7-4. Commands other than those documented are undefined and must not be sent to the device.

An I²C write sequence is performed to send a command to the HDC302x. Some of these commands also require configuration data from the I²C controller. In those instances, a CRC byte must accompany the configuration data to permit error checking by the HDC302x. Both of these I²C write scenarios are illustrated in Figure 7-1 and Figure 7-2.

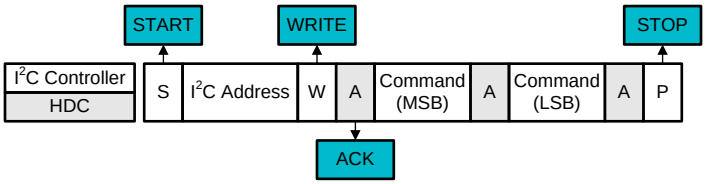

Figure 7-1. I²C Write Command, No Configuration Data Required

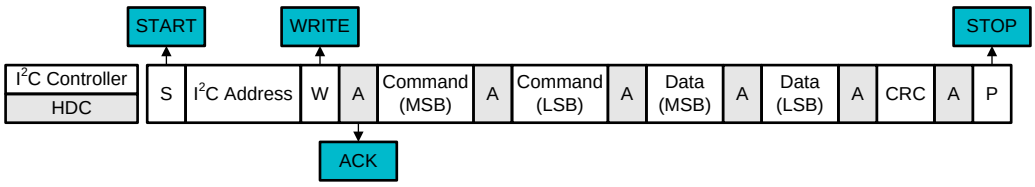

Figure 7-2. I²C Write Command, Configuration Data and CRC Byte Required

7.5.4 I²C Read - Retrieve Single Data Result

An I²C read sequence is performed to retrieve data from the HDC302x. The I²C read sequence *must follow* the I²C write sequence that is used to initiate the read command to the device. A CRC byte always accompanies data that is transmitted by the HDC302x. The I²C controller must accept the CRC byte regardless of whether or not the user wants to use the CRC. The I²C controller cannot issue a NACK before the CRC is received to discard the CRC transmission. The I²C read is illustrated in Figure 7-3.

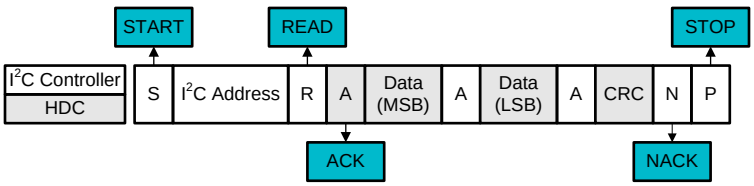

Figure 7-3. I²C Read Single Data Result

The HDC302x stops transmission of a data byte if the I²C controller fails to ACK after any byte of data.

Copyright © 2024 Texas Instruments Incorporated

7.5.5 I²C Read - Retrieve Multi Data Result

When an I²C read sequence is performed to retrieve multiple data results and the I²C controller does not use the CRC byte to perform a data integrity check, the I²C controller must still receive the final CRC byte. This I²C read scenario is illustrated in Figure 7-4.

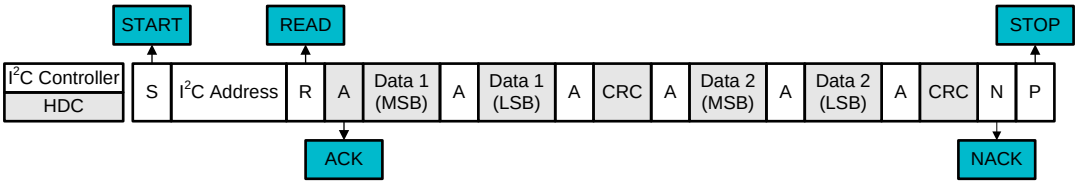

Figure 7-4. I²C Read Multi Data Result

7.5.6 I²C Repeated START - Send Command and Retrieve Data Results

HDC302x supports I²C repeated START, which enables the issue of a command and retrieval of data without releasing the I²C bus. As with all other data retrieval requests, reception of the CRC byte corresponding to the last data result must be retained. This example is illustrated in Figure 7-5 for a single data result retrieval, and in Figure 7-6 for a multi data result retrieval.

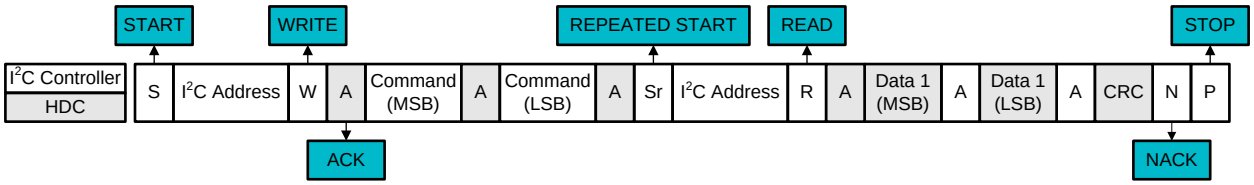

Figure 7-5. I²C Repeated START Sequence, Single Data Result

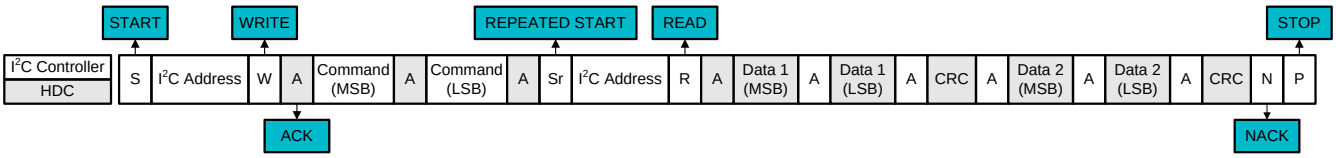

Figure 7-6. I²C Repeated START Sequence, Multi Data Result

7.5.7 Command Table and Detailed Description

The HDC302x command structure is documented below in Table 7-4. Details about each individual command are documented in the subsections below.

Table 7-3. HDC302x Low Power Mode (LPM) options and description (25C, V_{DD}=3.3V)

Low Power Mode (LPM)	Measurement duration (typical)	Active IQ (typical)	RH measurement noise
LPM0	12.5 ms	110 µA	±0.02 %RH
LPM1	7.5 ms	108 µA	±0.02 %RH
LPM2	5.0 ms	103 µA	±0.03 %RH
LPM3	3.7 ms	99 µA	±0.04 %RH

Table 7-4. HDC302x Command Table

HEX CODE (MSB)	HEX CODE (LSB)	COMMAND	COMMAND DETAIL
24	00	Trigger-On Demand Mode Single Temperature (T) Measurement and Relative Humidity (RH) Measurement(1)	Low Power Mode 0 (lowest noise)
24	0B		Low Power Mode 1
24	16		Low Power Mode 2
24	FF		Low Power Mode 3 (lowest power)
20	32	Auto Measurement Mode 1 measurement per 2 seconds.	Low Power Mode 0 (lowest noise)
20	24		Low Power Mode 1
20	2F		Low Power Mode 2
20	FF		Low Power Mode 3 (lowest power)
21	30	Auto Measurement Mode 1 measurement per second.	Low Power Mode 0 (lowest noise)
21	26		Low Power Mode 1
21	2D		Low Power Mode 2
21	FF		Low Power Mode 3 (lowest power)
22	36	Auto Measurement Mode 2 measurements per second.	Low Power Mode 0 (lowest noise)
22	20		Low Power Mode 1
22	2B		Low Power Mode 2
22	FF		Low Power Mode 3 (lowest power)
23	34	Auto Measurement Mode 4 measurements per second.	Low Power Mode 0 (lowest noise)
23	22		Low Power Mode 1
23	29		Low Power Mode 2
23	FF		Low Power Mode 3 (lowest power)
27	37	Auto Measurement Mode 10 measurements per second.	Low Power Mode 0 (lowest noise)
27	21		Low Power Mode 1
27	2A		Low Power Mode 2
27	FF		Low Power Mode 3 (lowest power)
2C	06	Trigger-On Demand Mode Single Temperature (T) Measurement and Relative Humidity (RH) Measurement(1)	Low Power Mode 0 (lowest noise)
2C	0D		Low Power Mode 1
2C	10		Low Power Mode 2

Copyright © 2024 Texas Instruments Incorporated

Table 7-4. HDC302x Command Table (continued)

HEX CODE (MSB)	HEX CODE (LSB)	COMMAND	COMMAND DETAIL
30	93	Auto Measurement Mode	Exit, then return to Trigger-on Demand Mode.
E0	00		Measurement Readout of T and RH (Note: if RH and T are not updated, data read outs all FFs)
E0	01		Measurement Readout of RH only
E0	02		Measurement History Readout of Minimum T.
E0	03		Measurement History Readout of Maximum T.
E0	04		Measurement History Readout of Minimum RH.
E0	05		Measurement History Readout of Maximum RH.
61	00	Configure ALERT Thresholds of T and RH	Configures Thresholds for "Set Low Alert"
61	1D		Configures Thresholds for "Set High Alert"
61	0B		Configures Thresholds for "Clear Low Alert"
61	16		Configures Thresholds for "Clear High Alert"
E1	02	Read ALERT Thresholds of T and RH	Read Thresholds for "Set Low Alert"
E1	1F		Read Thresholds for "Set High Alert"
E1	09		Read Thresholds for "Clear Low Alert"
E1	14		Read Thresholds for "Clear High Alert"
30	6D	Integrated Heater	Enable
30	66		Disable
30	6E	Integrated Heater	Configure & Read Back Heater Settings
F3	2D	Status Register	Read Content
30	41		Clear Content
30	A2	Soft Reset	
36	83	Read NIST ID (Serial Number) Bytes 5 and 4	
36	84	Read NIST ID (Serial Number) Bytes 3 and 2	
36	85	Read NIST ID (Serial Number) Bytes 1 and 0	
37	81	Read Manufacturer ID (Texas Instruments) (0x3000)	

(1) For Trigger on Demand Mode there are three pairs of commands where either command in the pair gives the same results:
   a. 0x2400 and 0x2C06
   b. 0x240B and 0x2C0D
   c. 0x2416 and 0x2C1

Table 7-5. HDC302x Temp and RH read commands in hex code for different conversion times

Conversion rate	3.7ms conversion time	5ms conversion time	7.5ms conversion time	12.5ms conversion time
Trigger on Demand	0x24FF	0x2416	0x240B	0x2400
10 measurements per second	0x27FF	0x272A	0x2721	0x2737
4 measurements per second	0x23FF	0x2329	0x2322	0x2334
2 measurements per second	0x22FF	0x222B	0x2220	0x2236

Copyright © 2024 Texas Instruments Incorporated

Table 7-5. HDC302x Temp and RH read commands in hex code for different conversion times (continued)

Conversion rate	3.7ms conversion time	5ms conversion time	7.5ms conversion time	12.5ms conversion time
1 measurement per second	0x21FF	0x212D	0x2126	0x2130
1 measurement per 2 seconds	0x20FF	0x202F	0x2024	0x2032

Table 7-6. HDC302x NVM (EEPROM) Programming Command Table

HEX CODE (MSB)	HEX CODE (LSB)	COMMAND	COMMAND DETAIL
61	55	Program ALERT Thresholds of T and RH	Transfer ALERT thresholds into Non-Volatile Memory (NVM)
A0	04	Program/Read Offset Value of Relative Humidity and Temperature Results	
61	BB	Program/Read Default Device Power-On/Reset Measurement State	This command also allows the user to read back the device's default settings to check if EEPROM was programmed successfully.

The NVM programming command table refers to separate commands that allow the user to make permanent changes to the HDC302x by programming the EEPROM. When performing any of the above NVM programming commands, the user must first place the HDC302x into sleep mode if the HDC302x is not already in sleep mode. Then, after issuing the command, the user must wait according to t_{PROG} = 77ms. No other commands or communications can occur during this 77ms wait time. Once the wait is complete, the EEPROM has finished programming, and normal operation can resume.

Copyright © 2024 Texas Instruments Incorporated

Table 7-7. List of Valid Configuration Values to Override the Default Device Power-On/Reset Measurement State HDC302x

CFG (MSB)	CFG (LSB)	CRC	Configuration	Low Power Mode	Measurements per Second
0x00	0x03	0xD2	Automatic Measurement Mode	0 (lowest noise)	0.5
	0x05	0x74		0 (lowest noise)	1
	0x07	0x16		0 (lowest noise)	2
	0x09	0x09		0 (lowest noise)	4
	0x0B	0x6B		0 (lowest noise)	10
	0x13	0x91		1	0.5
	0x15	0x37		1	1
	0x17	0x55		1	2
	0x19	0x4A		1	4
	0x1B	0x28		1	10
	0x23	0x54		2	0.5
	0x25	0xF2		2	1
	0x27	0x90		2	2
	0x29	0x8F		2	4
	0x2B	0xED		2	10
	0x33	0x17		3 (lowest power)	0.5
	0x35	0xB1		3 (lowest power)	1
	0x37	0xD3		3 (lowest power)	2
	0x39	0xCC		3 (lowest power)	4
	0x3B	0xAE		3 (lowest power)	10
	0x00	0x81	Restores Factory Default (Sleep Mode)	No conversions	N/A

7.5.7.1 Reset

There are 4ways to reset the HDC302x, a Soft Reset command, a I^{2}C General Call Reset, a power-cycle, and applying a zero pulse on the nRESET pin.

7.5.7.1.1 Soft Reset

The HDC302x provides a software command, as illustrated in Figure 7-7, to force the device into the default state while maintaining supply voltage. This functionality is the software equivalent to a hardware reset through the Power Cycle or toggle of the $\overline{\text{RESET}}$ pin. When executed, the HDC302x resets the Status Register, reloads the calibration data and programmed humidity/temperature offset error from memory, clears previously stored measurement results, sets Interrupt Thresholds limits back to the default conditions.

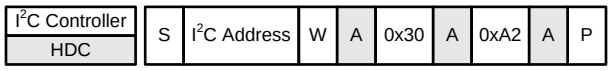

Figure 7-7. I^{2}C Command Sequence: HDC302x Software Reset

7.5.7.1.2 I^{2}C General Call Reset

In addition to the device-specific Soft Reset command, the HDC302x supports the general call address of the I^{2}C specification. This enables the use of a single command to reset an entire I^{2}C system (provided that all devices on the I^{2}C bus support it). Figure 7-8 shows this command. The general call is recognized when the sensor is able to process I^{2}C commands and is functionally equivalent to the Software Reset.

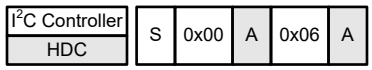

Figure 7-8. I^{2}C Command Sequence: HDC302x Reset Through General Call

7.5.7.2 Trigger-On Demand

This set of commands triggers a single measurement acquisition of temperature, followed by relative humidity. The HDC302x transitions from sleep mode into measurement mode, and upon measurement completion, returns to sleep mode. There are four possible Trigger On Demand commands, each one corresponding to a different conversion time (and therefore, different levels of power consumption). Table 7-4 shows these commands. After trigger on demand command is issued the host must provide the sensor enough time to finish the ordered conversion before starting the subsequent data read.

The measurement readout from these commands is obtained through an I²C read sequence, as previously documented in *I²C Read - Retrieve Single Data Result* and *I²C Read - Retrieve Multi Data Result*. The format of the measurement readout is two bytes of data representing temperature, followed by one byte CRC checksum, and then another two bytes of data representing relative humidity, followed by one byte CRC checksum as illustrated in Figure 7-9.

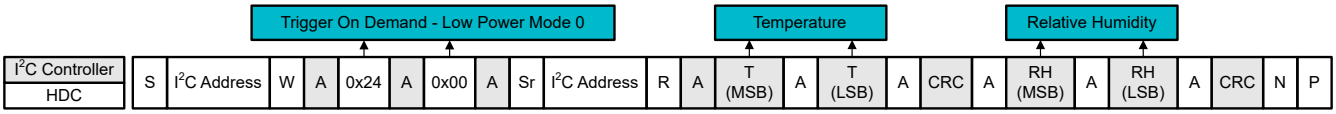

Figure 7-9. I²C Command Sequence: Example Measurement Readout in Trigger-On Demand Mode

If the I²C controller attempts to read the measurements results prior to new measurement's completion, the HDC302x responds with a NACK condition, as illustrated in Figure 7-10.

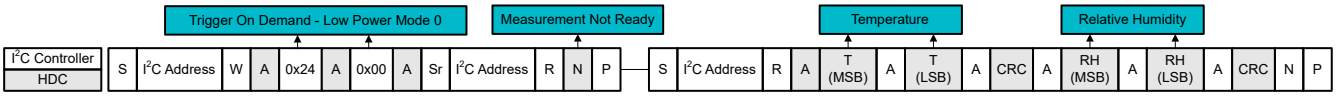

Figure 7-10. I²C Command Sequence: Example Measurement Not Ready in Trigger-On Demand Mode

7.5.7.3 Auto Measurement Mode

Auto Measurement mode forces the HDC302x to perform a temperature and relative humidity measurement at a specific timing period, removing the need for the I²C controller to repeatedly initiate a measurement acquisition. This section gives additional details for each command

7.5.7.3.1 Auto Measurement Mode: Enable and Configure Measurement Interval

There are 20 possible sampling periods and conversion time combinations when Auto Measurement mode is enabled. These commands are documented in Table 7-4. To avoid self-heating of the temperature sensor, TI recommends to limit the sampling interval to no faster than 1 measurement/second, as illustrated in Figure 7-11.

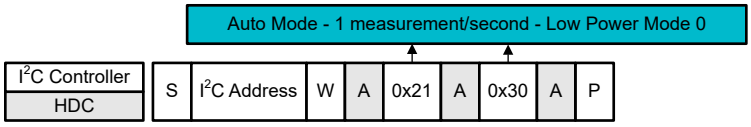

Figure 7-11. I²C Command Sequence: Enable Auto Measurement Mode at 1 Measurement per Second

7.5.7.3.2 Auto Measurement Mode: Measurement Readout

The latest measurement acquisition in Auto Measurement Mode can be retrieved using measurement readout commands, which are documented in Table 7-4, and illustrated in Figure 7-12. Once the measurement readout is complete, the HDC302x clears the measurement result. Therefore, if the next attempt to read data occurs before the following conversion attempt, the read results are +130°C for temperature and +100%RH for humidity.

As in *Trigger-On Demand*, if the I²C controller attempts to read the measurement results prior to measurement completion, the HDC302x responds with a NACK condition.

Copyright © 2024 Texas Instruments Incorporated

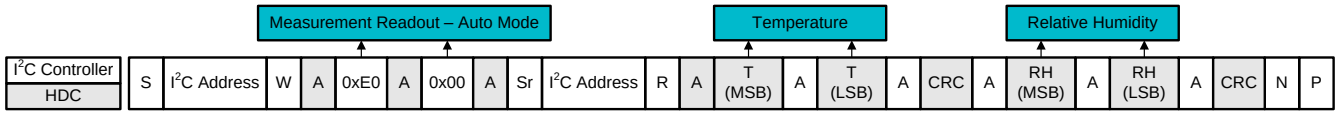

Figure 7-12. I²C Command Sequence: Measurement Readout in Auto Measurement Mode

7.5.7.3.3 Auto Measurement Mode: Exit

The command to exit Auto Measurement mode is documented in Table 7-4 and illustrated in Figure 7-13. The HDC302x immediately discontinues any measurement in progress and return to sleep mode.

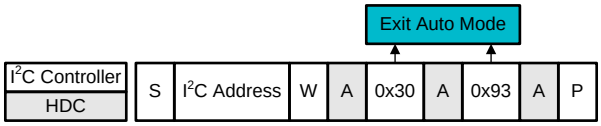

Figure 7-13. I²C Command Sequence: Exit Auto Measurement Mode

7.5.7.3.4 Auto Measurement Mode: Extreme Measurement History

Within Auto Measurement Mode, the HDC302x maintains a history of the maximum and minimum measurement for temperature and relative humidity (described as variables MIN T, MAX T, MIN RH, and MAX RH). Table 7-8 summarizes the status of MIN T, MAX T, MIN RH, and MAX RH after device reset.

Table 7-8. Status of Measurement History Variables Based on HDC302x Configuration

HDC302x Configuration	MIN T	MAX T	MIN RH	MAX RH
After reset	130°C	-45°C	100%	0%
Within Auto Measurement Mode	Monitored and Latched When Appropriate			

The values of MIN T, MAX T, MIN RH, and MAX RH are updated only in auto measurement mode. The values can be read out in auto measurement mode and during sleep mode. These values can be reset to the starting value only with a reset event. Figure 7-14 illustrates the I²C sequence for measurement readout of MIN T, MAX T, MIN RH, and MAX RH.

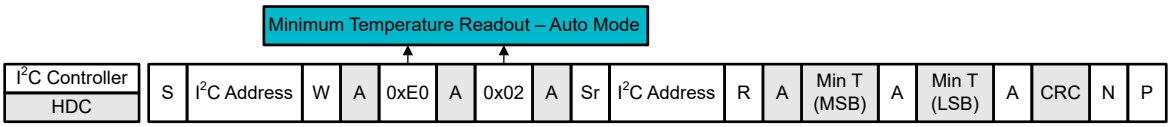

Figure 7-14. I²C Sequence: Minimum Temperature Measurement Readout (Auto Measurement Mode)

7.5.7.3.5 Override Default Device Power-On and Device-Reset State

The HDC302x manufacturer defaults to entering sleep mode after a device power-on or a device-reset. However, an override command can be sent to the HDC302x to force entry into Automatic Measurement mode upon every device power-on and device-reset. The command is illustrated in below in Figure 7-15 and the list of all possible command configurations is documented in Table 7-7. Since this is a EEPROM programming command, no communications can occur after this command is issued until the EEPROM programming is complete. The HDC302x must be placed in sleep mode before this command or any EEPROM programming command is issued.

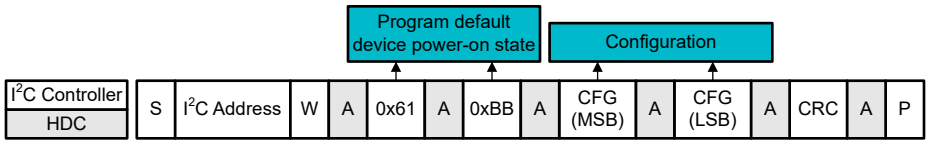

Figure 7-15. I²C Sequence: Configure Default Power On State and Sampling Period

7.5.7.4 ALERT Output Configuration

The HDC302x provides hardware notification of events through an interrupt output pin (ALERT). Specifically, the ALERT output represents the status of bits 15, 11, 10, and 4 from the Status Register. The ALERT output asserts to Logic High upon detection of an event and deasserts to Logic Low when the event has passed or after the Status Register is cleared.

The ALERT output is activated by default upon Power Up, and any reset event. The ALERT output goes low when the HDC302x has been disabled using the assertion of the $\overline{\text{RESET}}$ pin.

If temperature correlative humidity tracking through the ALERT output is not desired, the feature can be disabled as explained in *ALERT Output: Deactivation of Environmental Tracking*.

7.5.7.4.1 ALERT Output: Environmental Tracking of Temperature and Relative Humidity

The primary use of the ALERT output is to provide a signal notification of ambient temperature and relative humidity measurements that violate programmed thresholds. There are a total of four programmable thresholds for temperature and four for relative humidity, as documented in Table 7-4 and illustrated in Figure 7-16 below.

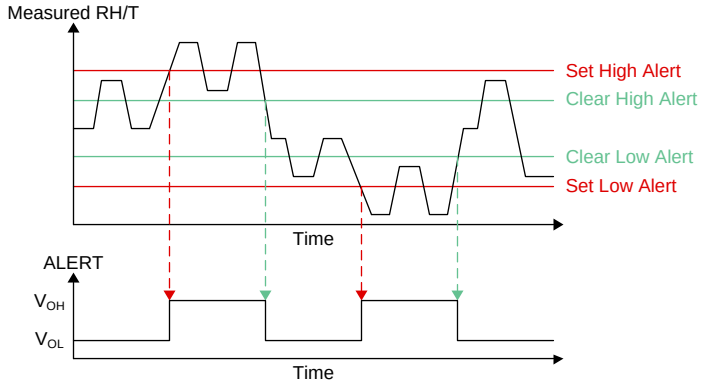

Figure 7-16. Graphical Illustration of ALERT Programmable Environmental Thresholds

The four programmable thresholds are listed below

1. **Set High Alert**: Asserts ALERT output when HDC302x measures a temperature or relative humidity level that has risen above this value.
2. **Clear High Alert**: Deasserts the ALERT output caused by Set High Alert, once HDC302x measures a temperature or relative humidity level that has fallen below this value.
3. **Set Low Alert**: Programmed value that asserts ALERT output when HDC302x measures a temperature or relative humidity level that has fallen below this value.
4. **Clear Low Alert**: Programmed value that deasserts the ALERT output caused by Set Low Alert, once HDC302x measures a temperature of relative humidity level that has risen above this value.

If the user application uses the ALERT output for environmental tracking, the best practice is to program these four thresholds prior to any temperature or relative humidity measurement acquisition. Programming enough separation between the Set versus Clear thresholds is important because a small distance between Set and Clear levels can cause the ALERT pin to toggle high and low due to measurement noise.

Copyright © 2024 Texas Instruments Incorporated

7.5.7.4.2 ALERT Output: Representation of Environmental Thresholds and Default Threshold Values

The Set High Alert, Clear High Alert, Set Low Alert, and Clear Low Alert thresholds are each represented by a truncated 16 bit value, as illustrated Figure 7-17. The 7 MSBs from a relative humidity measurement are concatenated with the 9 MSBs from a temperature measurement. The actual temperature and relative humidity measurement result are always stored as a 16-bit value, but when compared against the programmed threshold values, due to the truncated representation, there is a resolution loss of 0.5°C in temperature and a 1% resolution loss in relative humidity.

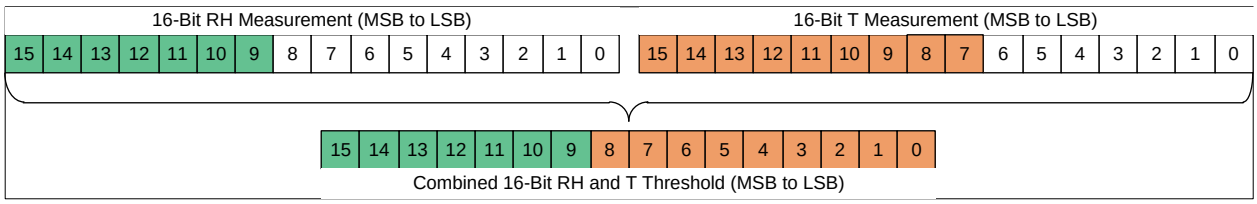

Figure 7-17. Representation of ALERT Threshold Value Using Combined RH and T

The manufacturer default values of the relative humidity and temperature thresholds after a reset event are documented in Table 7-9 below. Refer to Table 7-4 for the appropriate command to re-program the thresholds.

Table 7-9. Default Value of ALERT Thresholds

ALERT THRESHOLD	MANUFACTURER DEFAULT RH THRESHOLD	MANUFACTURER DEFAULT T THRESHOLD	HEX VALUE	CRC
Set High Alert	80% RH	60°C	0xCD33	0xFD
Clear High Alert	79% RH	58°C	0xCB2D	0x22
Set Low Alert	20% RH	-10°C	0x3266	0xAD
Clear Low Alert	22% RH	-9°C	0x3869	0x37

7.5.7.4.3 ALERT Output: Steps to Calculate and Program Environmental Thresholds

The steps to calculate the Set High Alert, Clear High Alert, Set Low Alert, and Clear Low Alert thresholds are listed below:

1. Select the desired relative humidity and temperature threshold to program, and the programmed value.
2. Convert the relative humidity and temperature threshold value to the respective 16-bit binary value
3. Retain the 7 MSBs for relative humidity and the 9 MSBs for temperature
4. Concatenate the 7 MSBs for relative humidity with the 9 MSBs for temperature to complete the 16-bit threshold representation
5. Calculate the CRC byte from the 16-bit threshold value

An example is provided below.

1. In this case, the Set High Alert threshold is programmed to 90% RH and 65°C
2. 90% RH converts to 0b1110011001100111 and 65°C T converts to 0b1010000011101011
3. 7 MSBs for 90% RH is 0b1110011 and 9 MSBs for 65°C T is 0b101000001
4. After concatenation of the relative humidity and temperature MSBs, the threshold representation is 0b1110011101000001 = 0xE741
5. For 0xE741, this corresponds to a CRC byte 0x55
   a. Figure 7-18 illustrates the appropriate command to send to the HDC302x.
   b. The HDC302x responds to reception of an incorrect CRC byte with a I^{2}C NACK.

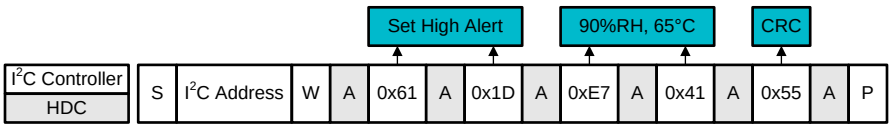

Figure 7-18. I^{2}C Command Sequence: Example Programming of Set High Alert to 90% RH, 65°C

7.5.7.4.4 ALERT Output: Deactivation of Environmental Tracking

To deactivate the ALERT output from responding to measurement results of temperature or relative humidity, the Set High Alert thresholds must be programmed to be lower than the Set Low Alert thresholds. Figure 7-19 illustrates an example of threshold programming that disables tracking of temperature as well as relative humidity. To be more specific:

- To disable Temperature Alert Tracking: Configure the temperature bits within the Set Low Alert threshold to be larger than the temperature bits within the Set High Alert threshold.
- To disable Humidity Alert Tracking: Configure the humidity bits within the Set Low Alert threshold to be larger than the humidity bits within the Set High Alert threshold.

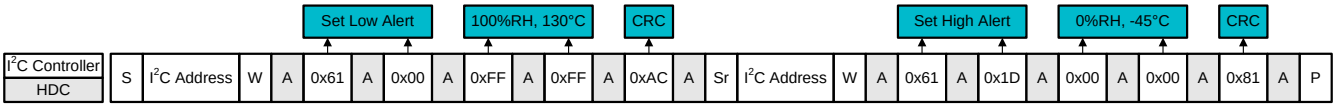

Figure 7-19. I²C Command Sequence: Example to Deactivate ALERT Output Tracking of Temperature and Relative Humidity

7.5.7.4.5 ALERT Output: Transfer Thresholds into Non-Volatile Memory

This command, illustrated below in Figure 7-20, enables an override of the default ALERT threshold values after a device reset or power cycle.

Since this is a EEPROM programming command, no communications can occur after this command is issued until the EEPROM programming is complete. The HDC302x must be placed in sleep mode before this command or any EEPROM programming command is issued. After programming the EEPROM, resetting the device and reading back all the ALERT values is recommended to verify the success of the the EEPROM program.

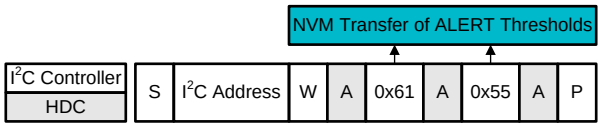

Figure 7-20. I²C Command Sequence: Transfer ALERT Thresholds into NVM

Copyright © 2024 Texas Instruments Incorporated

7.5.7.5 Programmable Measurement Offset

The HDC302x can be programmed to return a relative humidity measurement or temperature measurement that accounts for a programmed offset value. A sign bit (bit 15 and bit 7 in the combined RH and temperature offset registers) determines whether to add or subtract the offset from the actual sensor measurement results. This feature is targeted for designs where local heat sources can not be isolated from the temperature sensor and said heat sources show variation over time (due to different components being enabled/disabled). The command is documented in the Table 7-4.

The device must be in sleep mode if the user wants to change the offset because the device can give unpredictable results if the device is in auto measurement mode. Note the RH measurement uses the measured temperature for correction and does not use the programmed temperature offset, which allows the user to program a temperature offset to account for local heating without affecting RH accuracy.

Programming either offset value requires programming of a corresponding non-volatile memory location in the EEPROM. Therefore, I^2C communications are not permitted until offset programming is complete. Refer to the *Electrical Characteristics* table for the time needed to complete programming a single location, t_{PROG}, and the current required during programming, I_{EEPROM}. These instructions apply to not only to the offset programming, but to all EEPROM programming commands as well.

7.5.7.5.1 Representation of Offset Value and Factory Shipped Default Value

As illustrated in Figure 7-21, the programmed offset values for relative humidity (RH_{OS}) and temperature (T_{OS}) are combined into a single 16-bit representation. 7 bits represent RH_{OS}, 7 bits represent T_{OS}, 1 operation bit ($RH_{+/-}$) to add or subtract RH_{OS}, and 1 operation bit ($T_{+/-}$) to add or subtract T_{OS}. From the 16-bit representation of relative humidity, bits 13 through 7 are used to represent RH_{OS}. From the 16-bit representation of temperature, bits 12 through 6 are used to represent T_{OS}.

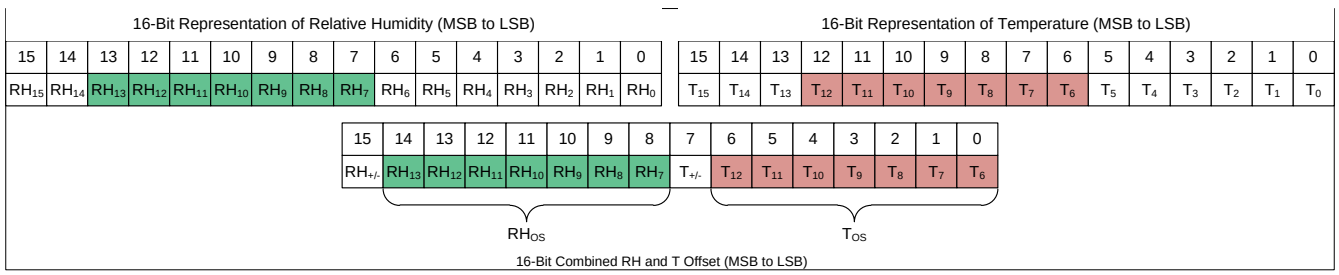

Figure 7-21. Data Structure to Represent Programmed Offset Values for RH and T

7.5.7.5.2 Factory Shipped Default Offset Values

The HDC302x is factory-shipped with default values of 0x00 for both RH_{OS} and T_{OS}.

7.5.7.5.3 Calculate Relative Humidity Offset Value

Table 7-10 documents the programmed offset value that is represented by each individual relative humidity offset bit within RH_{OS}. The minimum programmable offset is 0.1953125% and the maximum programmable offset is 24.8046875%. The RH can not report below 0% RH, even if offset is negative.

Table 7-10. Relative Humidity Offset Value (RH_{OS}) Represented by Each Data Bit

RH OFFSET BIT	VALUE WHEN PROGRAMMED TO 0	VALUE WHEN PROGRAMMED TO 1
$RH_{+/-}$	Subtract	Add
RH_{13}	0	12.5
RH_{12}	0	6.25
RH_{11}	0	3.125
RH_{10}	0	1.5625
RH_9	0	0.78125
RH_8	0	0.390625

Copyright © 2024 Texas Instruments Incorporated

Table 7-10. Relative Humidity Offset Value (RH_{OS}) Represented by Each Data Bit (continued)

RH OFFSET BIT	VALUE WHEN PROGRAMMED TO 0	VALUE WHEN PROGRAMMED TO 1
RH_7	0	0.1953125

Table 7-11 below gives an example of some of the possible calculated relative humidity offset values (including the operation bit $RH_{+/-}$):

Table 7-11. Example Programmed Values of RH_{OS}

$RH_{+/-}$	RH_{13}	RH_{12}	RH_{11}	RH_{10}	RH_9	RH_8	RH_7	RH OFFSET VALUE
1	0	0	0	0	0	0	1	+0.1952125% RH
0	0	0	0	0	0	0	1	-0.1952125% RH
1	1	0	0	0	0	0	0	+12.5% RH
0	1	0	0	0	0	0	0	-12.5% RH
1	0	1	0	1	0	1	0	+8.203125% RH
0	0	1	0	1	0	1	0	-8.203125% RH
1	1	1	1	1	1	1	1	+24.8046875% RH
0	1	1	1	1	1	1	1	-24.8046875% RH

7.5.7.5.4 Calculate Temperature Offset Value

Table 7-12 documents the programmed offset value that is represented by each individual relative temperature offset bit within T_{OS}. The minimum programmable offset is 0.1708984375°C and the maximum programmable offset is 21.7041015625°C. The changing temperature offset does not affect the RH reading, despite RH typically being dependent on temperature.

Table 7-12. Temperature Offset Value (T_{OS}) Represented by Each Data Bit

T OFFSET BIT	VALUE WHEN PROGRAMMED TO 0	VALUE WHEN PROGRAMMED TO 1
$T_{+/-}$	Subtract	Add
T_{12}	0	10.9375
T_{11}	0	5.46875
T_{10}	0	2.734375
T_9	0	1.3671875
T_8	0	0.68359375
T_7	0	0.341796875
T_6	0	0.1708984375

Table 7-13 below gives an example of some of the possible calculated temperature offset values (including the operation bit $T_{+/-}$):

Table 7-13. Example Programmed Values of T_{OS}

$T_{+/-}$	T_{12}	T_{11}	T_{10}	T_9	T_8	T_7	T_6	T OFFSET VALUE
1	0	0	0	0	0	0	1	+0.1708984375°C
0	0	0	0	0	0	0	1	-0.1708984375°C
1	1	0	0	0	0	0	0	+10.9375°C
0	1	0	0	0	0	0	0	-10.9375°C
1	0	1	0	1	0	1	0	+7.177734375°C
0	0	1	0	1	0	1	0	-7.177734375°C
1	1	1	1	1	1	1	1	21.7041015625°C
0	1	1	1	1	1	1	1	-21.7041015625°C

Copyright © 2024 Texas Instruments Incorporated

7.5.7.5.5 Program an Offset Value

After determining the desired value of $RH_{+/-}$, RH_{OS}, $T_{+/-}$, and T_{OS}, as documented in *Calculate Relative Humidity Offset Value* and *Calculate Temperature Offset Value*, determine the correct CRC checksum and send all three bytes to the HDC302x as illustrated in Figure 7-22 (along with an example scenario of +8.20% RH and –7.17°C). There can be a communication pause of at least 50ms after this command.

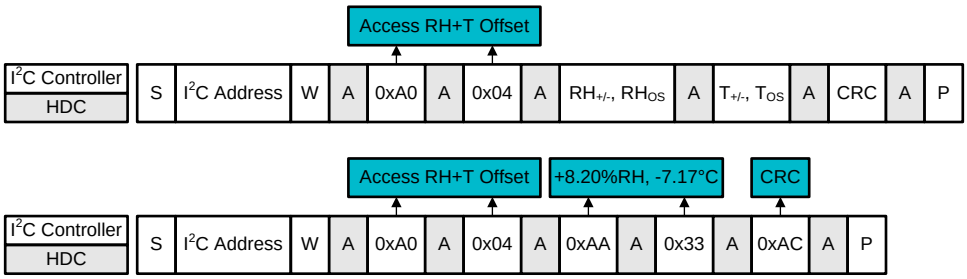

Figure 7-22. I²C Command Sequence: Programming RH and T Offset (Example With +8.20% RH and –7.17°C)

7.5.7.5.6 Verify a Programmed Offset Value

The command to verify the programmed offset values is documented in Table 7-4 and the command sequence is illustrated in Figure 7-23. The user must wait at least 77ms after programming an offset to temperature or humidity before attempting to read back the new programmed value.

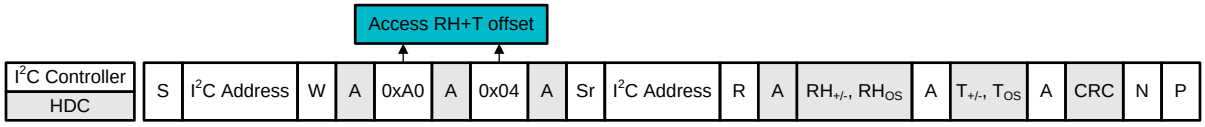

Figure 7-23. I²C Command Sequence: Verify Programmed RH and T Offset

7.5.7.6 Status Register

The Status Register contains real-time information about the operating state of the HDC302x, as documented in Table 7-14. There are two commands associated with the Status Register: Read Content and Clear Content, as documented in Table 7-4 and illustrated in Figure 7-24 and Figure 7-25.

Table 7-14. Customer View: Status Register

BIT	DEFAULT	DESCRIPTION
15	1	Overall Alert Status 0 = No active alerts 1 = At least one tracking or reset alert
14	0	Reserved
13	0	Heater Status 0 = Heater Disabled 1 = Heater Enabled
12	0	Reserved
11	0	RH Tracking Alert . Mirrored on the Alert pin 0 = No RH alert 1 = RH alert
10	0	T Tracking Alert . Mirrored on the Alert Pin 0 = No T alert 1 = T alert

Table 7-14. Customer View: Status Register (continued)

BIT	DEFAULT	DESCRIPTION
9	0	RH High Tracking Alert 0 = No RH High alert 1 = RH High alert
8	0	RH Low Tracking Alert 0 = No RH Low alert 1 = RH Low alert
7	0	T High Tracking Alert 0 = No T High alert 1 = T High alert
6	0	T Low Tracking Alert 0 = No T Low alert 1 = T Low alert
5	0	Reserved
4	1	Device Reset Detected Alert. Mirrored on Alert pin. 0 = No reset detected since last clearing of Status Register 1 = Device reset detected (via hard reset, soft reset command or supply on)
3	0	Reserved
2	0	Reserved
1	0	Reserved
0	0	Checksum verification of last data write 0 = Pass (correct checksum received) 1 = Fail (incorrect checksum received). Can be cleared only by successful data write or by reset event.

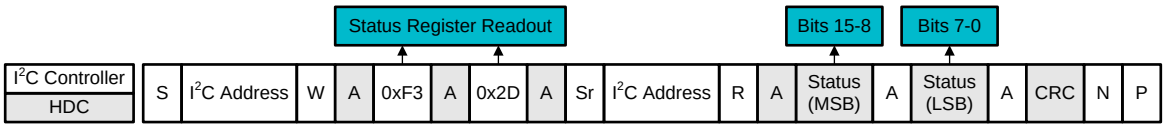

Figure 7-24. I²C Command Sequence: Read Status Register

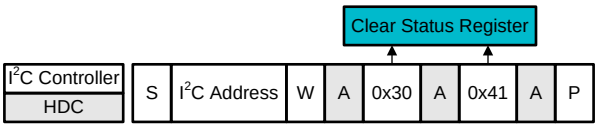

Figure 7-25. I²C Command Sequence: Clear Status Register

The Clear Status Register command clears only the reset and tracking bits in the status register.

7.5.7.7 Heater: Enable and Disable

The HDC302x includes an integrated heater with enough power to enable operation in condensing environments. The heater protects the humidity sensor area by preventing condensation as well as removing condensate. Enabling and disabling of the heater is documented in Table 7-4 and illustrated in Figure 7-26 and Figure 7-27.

The heater is expected to impact the temperature measurement result and the relative humidity measurement result. An IC-based humidity sensor uses the die temperature as an estimate for the ambient temperature. Use of the heater increases the die temperature up to 80°C above ambient temperature (depending on supply voltage). Therefore, accurate measurement results of ambient temperature and relative humidity are not possible when the heater is in operation.

Recognizing that the integrated heater evaporates condensate that forms on top of the humidity sensor is important, but does not remove any dissolved contaminants. This contaminant residue, if present, can impact the

Copyright © 2024 Texas Instruments Incorporated

accuracy of the humidity sensor. The IP67 rated PTFE permanent filter of HDC3022 protects the humidity sensor from the condensation and the dissolved contaminants when the condensation is evaporated.

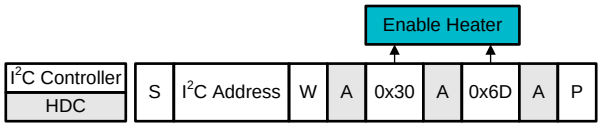

Figure 7-26. I²C Command Sequence: Enable Heater

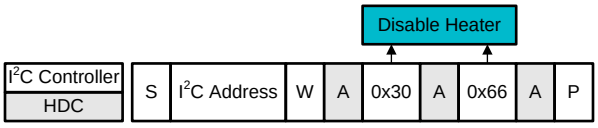

Figure 7-27. I²C Command Sequence: Disable Heater

7.5.7.8 Heater: Configure Level of Heater Current

The HDC302x heater architecture is comprised of 14 resistors in parallel, allowing support of several different power levels. The intent of this resistor array is to configure the appropriate heater current for offset error correction or condensation prevention/removal based on the ambient temperature and supply voltage. The heater array is represented by HEATER_CONFIG[15:0], which is defined as:

HEATER_CONFIG[15:0] = $H_{13}H_{12}H_{11}H_{10}H_9H_8H_7H_6H_5H_4H_3H_2H_1H_0$, where each H_X bit represents the configuration of Heater #X of 14. The table below provides a partial list of heater configuration options.

The level of heater power also depends on VDD, with higher VDD providing more heater power and hence more device heating. Care must be taken to avoid exceeding 100C in situations where water has condensed on top of the sensor.

Table 7-15. Example Configurations of HEATER_CONFIG[16:0]

DESIRED HEATER CONFIGURATION	REQUIRED HEATER_CONFIG[15:0][HEX]	CRC
ENABLE HEATER full power	3F FF	06
ENABLE HEATER half power	03 FF	00
ENABLE HEATER quarter power	00 9F	96

Table 7-16. Heater Typical Resistor Values Table

Heater Code, Hex	Typical Resistor Value (Ohms)
1	1875.7
2	1379.3
4	1361.7
8	674.5
F	292.4
10	692.0
20	692.0
40	472.8
80	475.3
F0	145.2
100	478.0
200	477.6
400	281.6

Copyright © 2024 Texas Instruments Incorporated

Table 7-16. Heater Typical Resistor Values Table (continued)

Heater Code, Hex	Typical Resistor Value (Ohms)
800	281.6
F00	93.2
1000	283.7
2000	284.6
3FFF	40.3

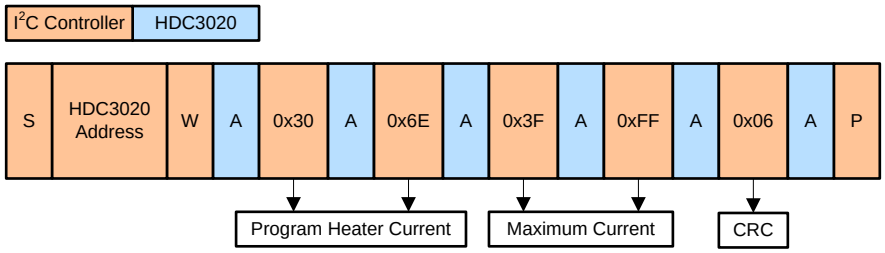

Figure 7-28. I²C Command Sequence: Configure Heater Current Full Power

7.5.7.9 Read NIST ID/Serial Number

Each HDC302x is configured with a unchangeable unique 48-bit code that is used to support NIST traceability of the sensor. The value can also be used to represent the unique serial number for that device. Three commands are required to read the full 48-bit value as illustrated in Figure 7-29, Figure 7-30, and Figure 7-31. Each command returns two bytes of NIST ID followed by a CRC byte. From MSB to LSB, the full device NIST ID is read as NIST_ID_5, NIST_ID_4, NIST_ID_3, NIST_ID_2, NIST_ID_1, and NIST_ID_0.

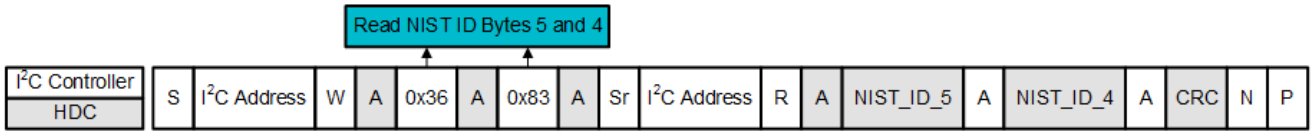

Figure 7-29. I²C Command Sequence: Read NIST ID (Bytes NIST_ID_5, Then NIST_ID_4)

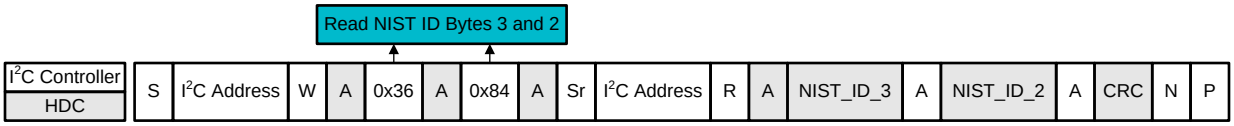

Figure 7-30. I²C Command Sequence: Read NIST ID (Bytes NIST_ID_3, Then NIST_ID_2)

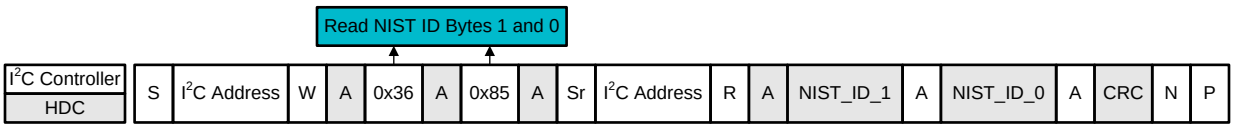

Figure 7-31. I²C Command Sequence: Read NIST ID (Bytes NIST_ID_1, Then NIST_ID_0)

Copyright © 2024 Texas Instruments Incorporated

8 Application and Implementation

Note

Information in the following applications sections is not part of the TI component specification, and TI does not warrant its accuracy or completeness. TI's customers are responsible for determining suitability of components for their purposes, as well as validating and testing their design implementation to confirm system functionality.

8.1 Application Information

The HDC302x is used to measure the relative humidity and temperature of the board location where the device is mounted. The configurable I^2C address option allow up to four locations be monitored on a single serial bus.

The calculated RH value is dependent on the temperature reading, therefore matching the sensor temperature with the air temperature is important to get an accurate RH result. Care must be taken to verify that the HDC302x is not heated from external sources or self-heated during normal operation.

8.2 Typical Application

One common application which requires a relative humidity and temperature sensor is a HVAC system thermostat control. This application is based on environmental sensors and a microcontroller. The microcontroller acquires data from humidity and temperature sensors and controls the heating and cooling system. The collected data are then shown on a display that can be easily controlled by the microcontroller. Based on data from the humidity and temperature sensor, the heating and cooling system then maintains the environment at the customer-defined preferred conditions.

Though a HVAC system thermostat is often line powered, low power is important in component selection, for energy star rating. The HDC302x, with 700 nA of current consumption (the average consumption over 1 second for RH and Temperature measurements), in conjunction with a MSP430, represents one way an engineer can obtain low power consumption. Figure 8-1 shows a system block diagram of a thermostat.

Copyright © 2024 Texas Instruments Incorporated

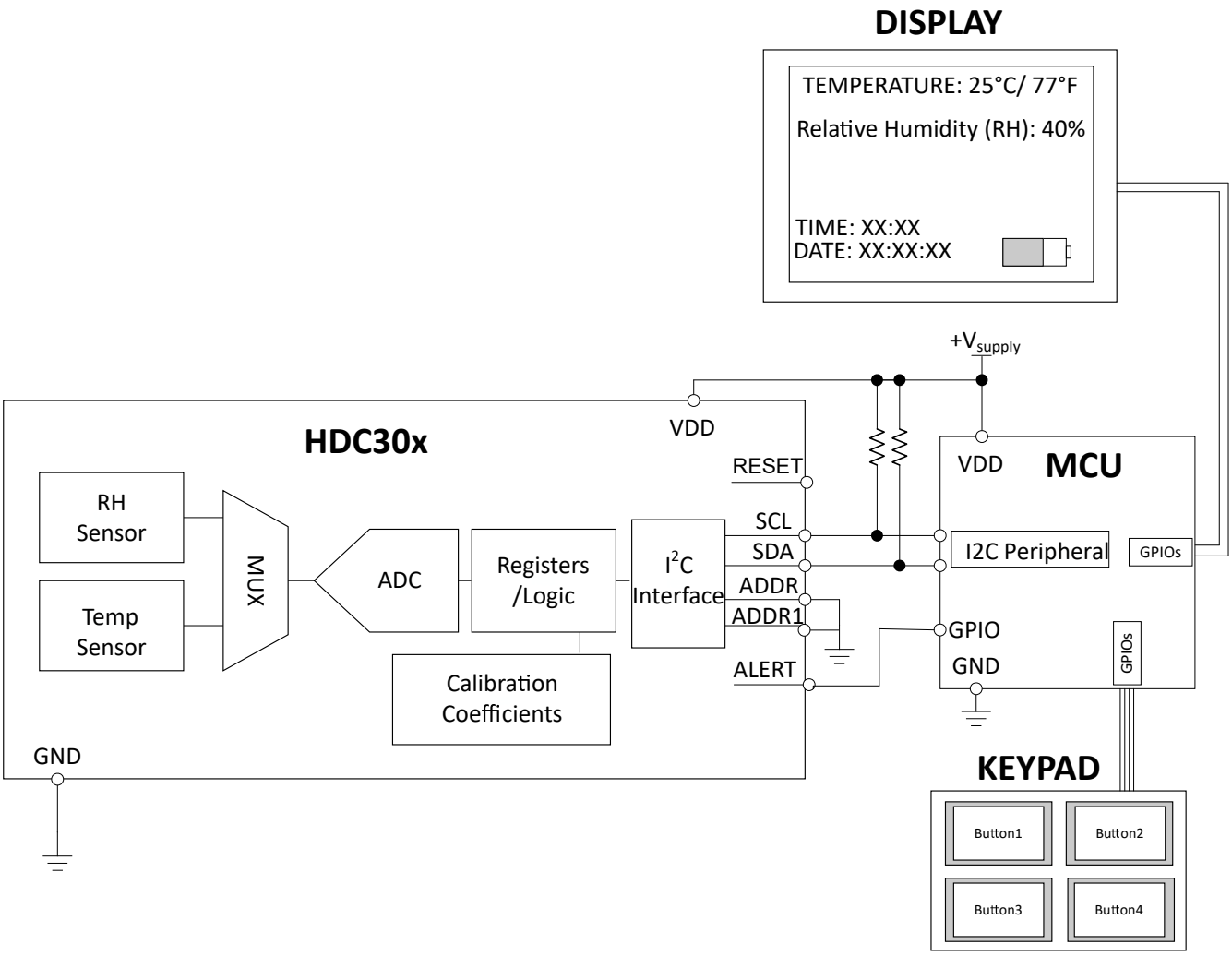

Figure 8-1. Typical Application Schematic HVAC

8.2.1 Design Requirements

To improve measurement accuracy, TI recommends to isolate the HDC302x from all heat sources in the form of active circuitry, batteries, displays and resistive elements. If design space is a constraint, cutouts surrounding the device or the inclusion of small trenches can help minimize heat transfer from PCB heat sources to the HDC302x. To avoid self-heating the HDC302x, TI recommends to configure the device to no faster than 1 measurement/second. Avoid adding heat to the device from hot sources like radiators or the sun.

The HDC302x operates only as a target device and communicates with the host through the I2C-compatible serial interface. SCL is an input pin, SDA is a bidirectional pin, and ALERT is an output. The HDC302x requires a pullup resistor on the SDA. An SCL pullup resistor is required if the system microprocessor SCL pin is open-drain. The recommended value for the pullup resistors is generally 5 kΩ. In some applications, the pullup resistor can be lower or higher than 5 kΩ. The size of the pullup resistor is determined by the amount of capacitance on the I2C lines, bus leakage, and the communication frequency. For further details, see the *I^2C Pullup Resistor Calculation* application note. A 0.1-µF bypass capacitor is recommended to be connected between V+ and GND. Use a ceramic capacitor type with a temperature rating that matches the operating range of the application, and place the capacitor as close as possible to the VDD pin of the HDC302x. The ADDR and ADDR0 pins must be connected directly to GND or VDD for address selection of four possible unique target ID addresses per the addressing scheme (see Table 7-2). The ALERT output pin can be connected to a microcontroller interrupt that triggers an event that occurred when the relative humidity or temperature are outside the programmed limits. Keep the ALERT pin in/out current below 1mA to prevent the device from self-heating. The ALERT pin must be

Copyright © 2024 Texas Instruments Incorporated

left floating when not in use. If not used, connecting the nRESET pin to VDD is best. This is to avoid glitches on the nRESET pin that can be caused by electromagnetic interference.

The user can decide whether or not to solder the package thermal pad to the PCB. Not soldering the thermal pad helps minimize thermal mass for maximum heater efficiency or to best measure ambient temperature (this also gives the device the best chance to survive a short caused by water getting under the package due to condensation). Soldering the thermal pad aids in the stability of the RH measurements because the temperature measurements are more stable due to the increased thermal mass. When using the HDC302x in a condensing environment, using the HDC3022 is best, since the IP67-rated filter cover keeps the sensor safe from water ingress. Users must also take caution to verify that water does not get under the device and on the pins of the device, to avoid shorting.

8.2.2 Detailed Design Procedure

The accuracy of a temperature and relative humidity measurement is dependent upon the sensor accuracy and the setup of the sensing system. The HDC302x measures relative humidity and temperature in the immediate environment, therefore verifying that the local conditions at the sensor match the ambient environment is critical. Use one or more openings in the physical cover over the device to obtain a good airflow even in static conditions. Conversely, avoid placing the sensor in too strong of an airflow (>1m/s typically). Strong air flows can result in large temperature and humidity result noise. Refer to the layout Figure 8-3 for a PCB layout which minimizes the thermal mass of the PCB in the region of the HDC302x, which can improve humidity response time and accuracy. Take care to avoid water condensation. Liquid water condensation on the sensor surface can result in erroneous RH readings, but also get under the package body and create electrical shorts. Placing the sensor in a vertical orientation can help condensation droplets roll off the sensor body, and prevent dust particles from landing and staying on the sensor as well. Avoid directly exposing the sensor to light. Light can both heat the sensor and accelerate the aging of the sensor, which leads to increased RH error over time.

8.2.3 Application Curve

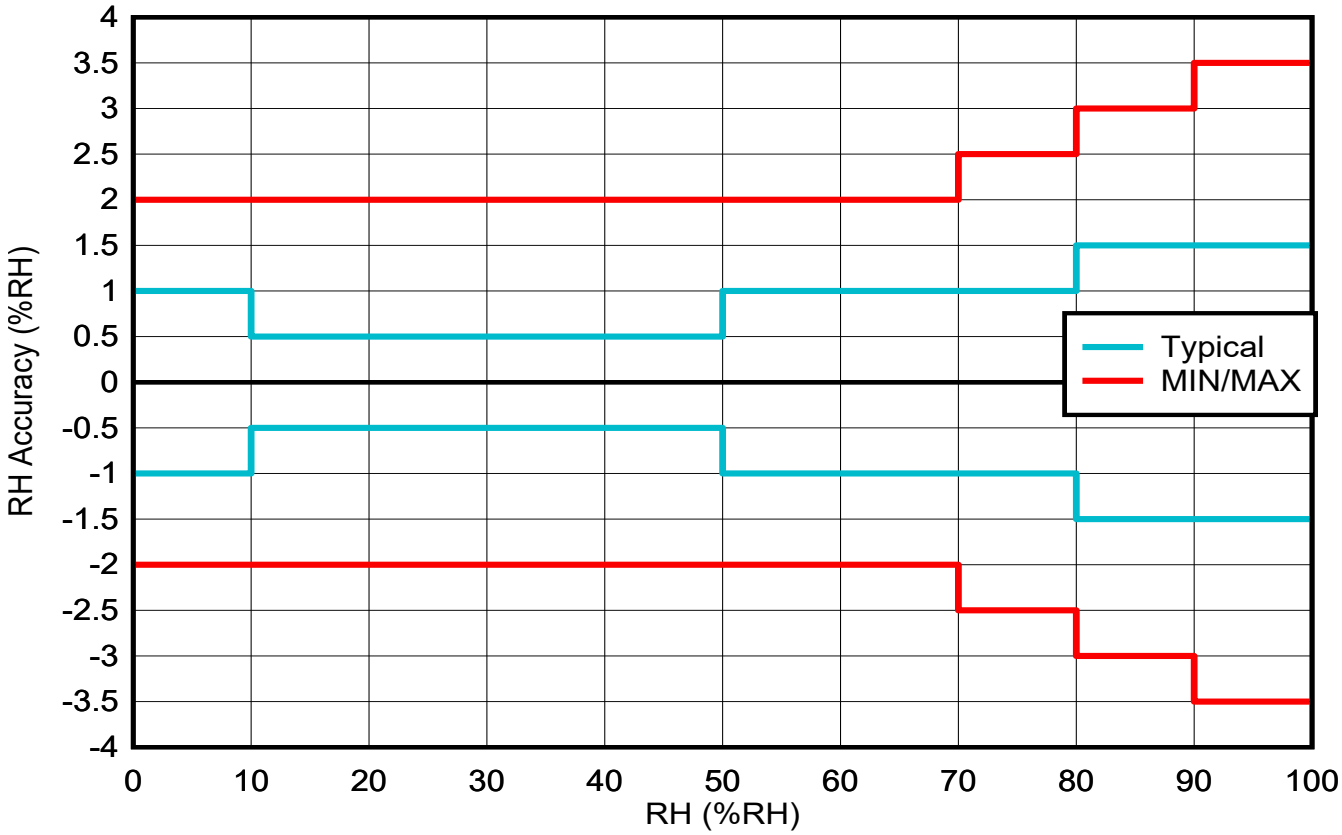

Figure 8-2. RH Accuracy vs RH

8.3 Power Supply Recommendations

The HDC302x supports a voltage supply range from 1.62 V up to 5.50 V. TI recommends a multilayer ceramic bypass X7R capacitor of 0.1 µF between the V_{DD} and GND pins. If the user plans to use the heater or utilize the EEPROM programming features, then the user must verify that the power supply and V_{DD}/GND traces can handle up to 100mA.

8.4 Layout

8.4.1 Layout Guidelines

Proper PCB layout of the HDC302x is critical to obtaining accurate measurements of temperature and relative humidity. Therefore, TI recommends to:

1. Isolate all heat sources from the HDC302x. This design means positioning the HDC302x away from power intensive board components such as a battery, display, or microcontroller. Ideally, the only onboard component close to the HDC302x is the supply bypass capacitor. See the *Layout Example* for more information.
2. Eliminate copper layers below the device (GND, V_{DD}).
3. Use slots or a cutout around the device to reduce the thermal mass and obtain a quicker response time to sudden environmental changes.
   - The diameter of the cutout around the part in this case is approximately 6 mm. The important details are to implement a separation of thermal planes while allowing for power, ground and data lines and place the part on the board, while still meeting mechanical assembly requirements. In addition to the *Layout Example*, other representations of cutouts for thermal relief can be found in the *Optimizing Placement and Routing for Humidity Sensors* application note.
4. Follow the Example Board Layout and Example Stencil Design that is illustrated in *Mechanical, Packaging, and Orderable Information*.
   - The SCL and the SDA lines require pullup resistors and TI recommends to connect a 0.1-uF capacitor to the VDD line.
   - TI recommends a multilayer ceramic bypass X7R capacitor of 0.1 µF between the VDD and GND pins.
5. Soldering the package thermal pad to a board pad that is left floating is best practice. However the package thermal pad can be left floating to minimize thermal mass for maximum heater efficiency or to measure ambient temperature. See the *HDC3x Silicon User's Guide* for more information regarding when leaving the thermal pad floating can be helpful for the user application.

8.4.2 Layout Example

Soldering the package thermal pad to a board pad that is shown in the layout example. To minimize thermal mass for maximum heater efficiency or to measure ambient temperature, however, the pad can be left floating. Floating the thermal pad is an option.

Copyright © 2024 Texas Instruments Incorporated

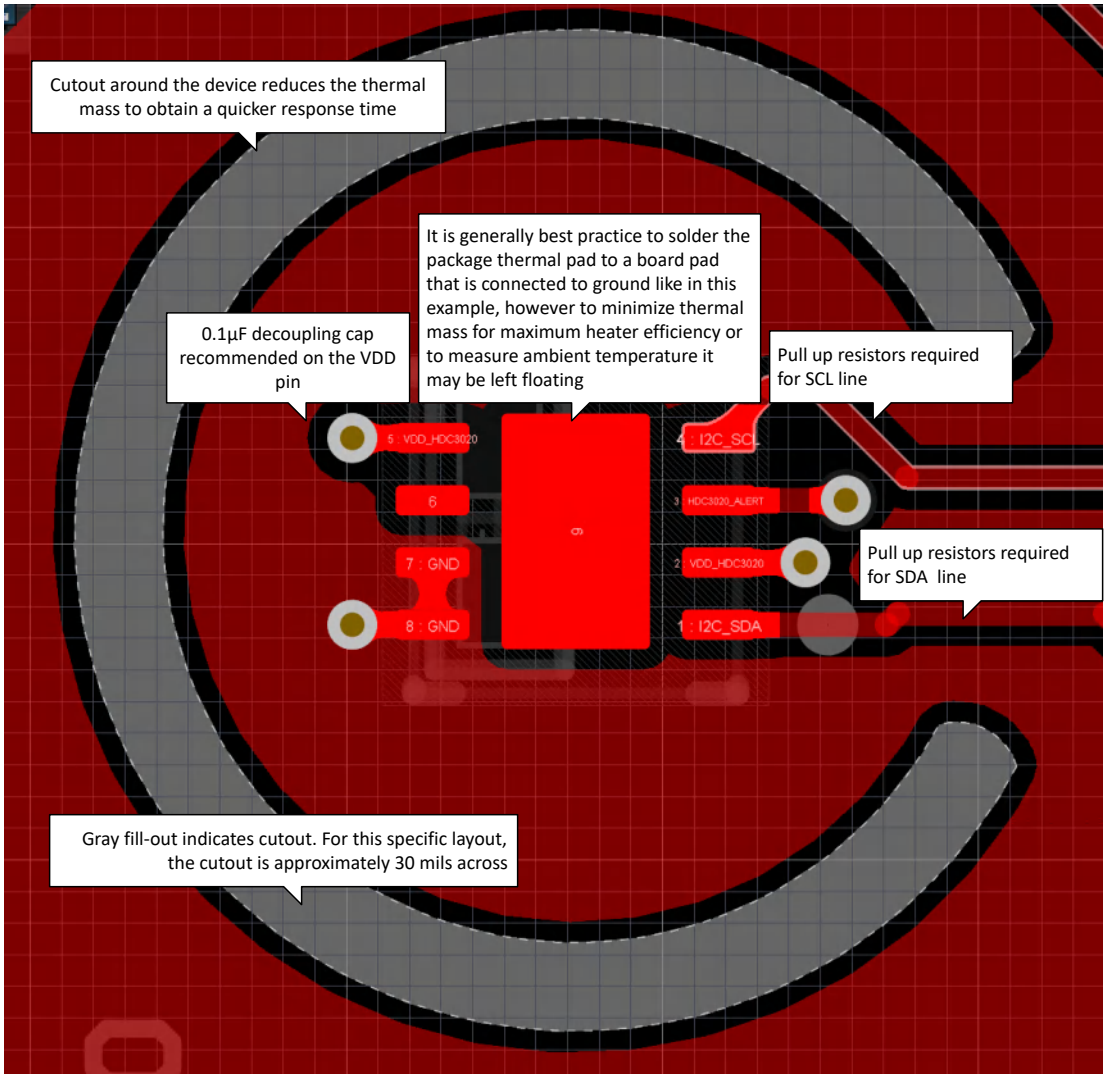

Figure 8-3. HDC302x PCB Layout Example

8.4.3 Storage and PCB Assembly

8.4.3.1 Storage and Handling

As with all humidity sensors, the HDC302x must follow special guidelines regarding handling and storage that are not common with standard semiconductor devices. Long exposure to UV and visible light, high temperature and high humidity, or exposure to chemical vapors for prolonged periods, must be avoided as the exposure can affect RH% accuracy. Additionally, the device must be protected from out-gassed solvent vapors produced during manufacturing, transport, operation, and package materials (that is, adhesive tapes, stickers, bubble foils). For further detailed information, see *HDC3x Silicon User's Guide*.

8.4.3.2 Soldering Reflow

For PCB assembly, standard reflow soldering ovens can be used. The HDC302x uses the standard soldering profile IPC/JEDEC J-STD-020 with peak temperatures at 260°C. When soldering the HDC3020, using *no-clean* solder paste is mandatory, and the paste must not be exposed to water or solvent rinses during assembly because these contaminants can affect sensor accuracy. When soldering HDC3021 or HDC3022, both which have a protective cover which protects the sensor, these devices allow for a printed circuit board (PCB) wash.

During reflow due to high temperature exposure, the sensor is expected (whether open cavity or a protective cover device is used) to generally output a shift in relative humidity. This shift reduces over time as the sensor

is exposed to typical indoor ambient conditions 25°C and 50% RH for five days. Following this rehydration procedure allows the polymer to correctly settle after reflow and return to the calibrated RH accuracy.

8.4.3.3 Rework

TI recommends to limit the HDC302x to a single IR reflow with no rework, but a second reflow can be possible if the following guidelines are met:

- The exposed polymer (humidity sensor) is kept clean and undamaged.
- No-clean solder paste is used and the process is not exposed to any liquids, such as water or solvents.
- The peak soldering temperature does not exceed 260°C.

8.4.3.4 Exposure to High Temperature and High Humidity Conditions

Long exposure outside the recommended operating conditions can temporarily offset the RH output. The recommended humidity operating range is 0 to 100% RH (non-condensing) over –20°C to 80°C. Prolonged operation beyond these ranges can shift the sensor reading with a slow recovery time.

8.4.3.5 Bake/Rehydration Procedure

Prolonged exposure to extreme conditions or harsh contaminants can impact sensor performance. In the case that permanent offset is observed from contaminants, the following procedure is suggested, which can recover or reduce the error observed in sensor performance:

1. Baking: 100°C, at less than 5%RH, for 5 to 10 hours
2. Rehydration: 25°C and 50%RH for 5 days

Copyright © 2024 Texas Instruments Incorporated

9 Device and Documentation Support

9.1 Documentation Support

9.1.1 Related Documentation

For related documentation, see the following:

- Texas Instruments, *Humidity Sensor: Storage and Handling Guidelines*, application note
- Texas Instruments, *Optimizing Placement and Routing for Humidity Sensors*, application note
- Texas Instruments, *HDC3020 EVM User's Guide*, EVM user's guide
- Texas Instruments, *HDC3x Silicon User's Guide*, user's guide
- Texas Instruments, *I^2C Pullup Resistor Calculation*, application note
- Texas Instruments, *85°C/85% RH Accelerated Life Test Impact on Humidity Sensors*, white paper
- Texas Instruments, *Leveraging Relative Humidity Sensor Enhanced Features for Ultra-Low-Power System*, application note
- Texas Instruments, *How the HDC3020 Humidity Sensor Family Achieves The Industry's Lowest Drift*, application note
- Texas Instruments, *Why long-term consistent performance matters for relative humidity sensors*, technical article
- Texas Instruments, *Interface to sensors in seconds with ASC Studio*, technical article

9.2 Receiving Notification of Documentation Updates

To receive notification of documentation updates, navigate to the device product folder on ti.com. Click on *Notifications* to register and receive a weekly digest of any product information that has changed. For change details, review the revision history included in any revised document.

9.3 Support Resources

TI E2E™ support forums are an engineer's go-to source for fast, verified answers and design help — straight from the experts. Search existing answers or ask your own question to get the quick design help you need.

Linked content is provided "AS IS" by the respective contributors. They do not constitute TI specifications and do not necessarily reflect TI's views; see TI's Terms of Use.

9.4 Trademarks

TI E2E™ is a trademark of Texas Instruments.
All trademarks are the property of their respective owners.

9.5 Electrostatic Discharge Caution

This integrated circuit can be damaged by ESD. Texas Instruments recommends that all integrated circuits be handled with appropriate precautions. Failure to observe proper handling and installation procedures can cause damage.

ESD damage can range from subtle performance degradation to complete device failure. Precision integrated circuits may be more susceptible to damage because very small parametric changes could cause the device not to meet its published specifications.

9.6 Glossary

TI Glossary	This glossary lists and explains terms, acronyms, and definitions.

10 Revision History

Changes from Revision C (December 2022) to Revision D (March 2024)	Page
• Added thermal pad configuration information to the *Pin Configuration and Functions* section	4
• Added 0% and 100% RH and 80°C data to Figure 6-3	10
• Changed multiple CRC values in the *List of Valid Configuration Values to Override the Default Device Power-On/Reset Measurement State* table	18

- Changed the *Soldering Reflow* section to add why rehydration is required for open cavity and protective cover devices and emphasize that all humidity sensors need rehydration after reflow 37
- Added the recommended operating range to the *Exposure to High Temperature and High Humidity Conditions* section..... 38

Changes from Revision B (August 2022) to Revision C (December 2022) — Page

- Changed data sheet status from Production Mixed to Production Data.....1
- Removed the preview note from the HDC3022 device..... 1

Changes from Revision A (September 2021) to Revision B (August 2022) — Page

- Changed data sheet status from Advanced Information to Production Mixed.....1
- Changed the device status on the HDC3020 and HDC3021 from Advanced Information to Production Data . 1
- Renamed drift correct to offset error correction.....1
- Removed that ADDR and ADDR1 pins can be left floating. The pins must NOT be left floating..... 4
- Updated electrical specifications to reflect pre-production testing characterization..... 5
- Added heater commands..... 18
- Corrected command code to read Manufacturing ID hex code LSB from: 80 to: 81.....18
- Added additional trigger on demand command codes: 0x2C06, 0x2C0D, 0x2C10..... 18
- Moved the *Power Supply Recommendations* and *Layout* sections to the *Application and Implementation* section..... 36
- Changed rehydration recommendation to 25°C and 50%RH for 5 days.....38

11 Mechanical, Packaging, and Orderable Information

The following pages include mechanical, packaging, and orderable information. This information is the most current data available for the designated devices. This data is subject to change without notice and revision of this document. For browser-based versions of this data sheet, refer to the left-hand navigation.

Copyright © 2024 Texas Instruments Incorporated

PACKAGE OUTLINE

DEF0008A-C01

WSON - 0.8 mm max height

PLASTIC SMALL OUTLINE - NO LEAD

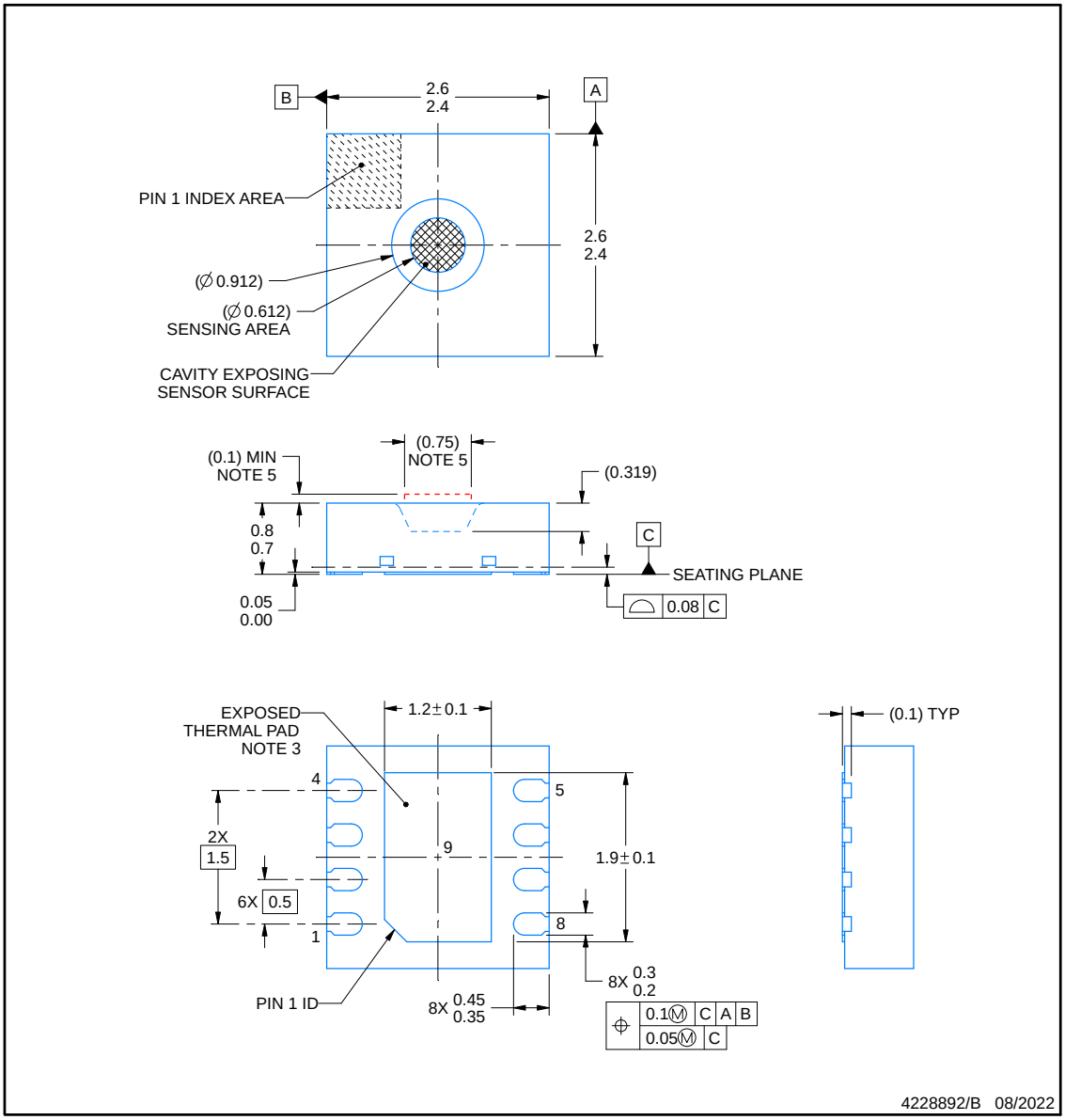

NOTES:

1. All linear dimensions are in millimeters. Any dimensions in parenthesis are for reference only. Dimensioning and tolerancing per ASME Y14.5M.
2. This drawing is subject to change without notice.
3. It is generally best practice to solder the package thermal pad to a board pad that is connected to ground, however to minimize thermal mass for maximum heater e□ciency or to measure ambient temperature it may be left floating.
4. The pick and place nozzle internal diameter has to be between ∅0.915 and ∅1.875 mm.
5. Customers must maintain adequate clearance from this region to allow for proper functioning of the humidity sensor.

Copyright © 2024 Texas Instruments Incorporated

EXAMPLE BOARD LAYOUT

DEF0008A-C01

WSON - 0.8 mm max height

PLASTIC SMALL OUTLINE - NO LEAD

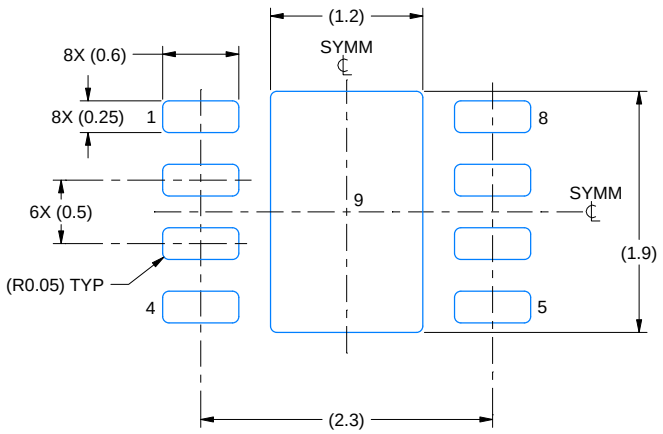

LAND PATTERN EXAMPLE
EXPOSED METAL SHOWN
SCALE:20X

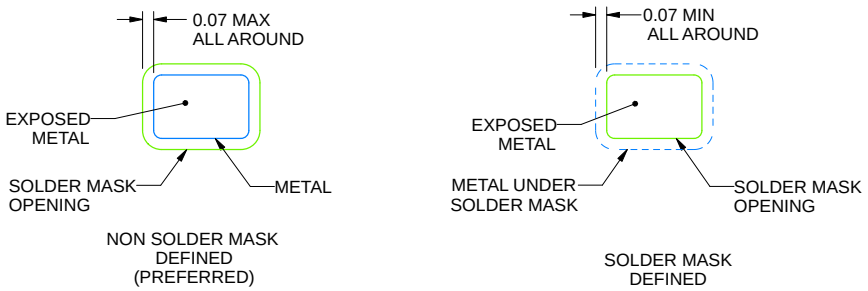

SOLDER MASK DETAILS

4228892/B 08/2022

NOTES: (continued)

6. This package is designed to be soldered to a thermal pad on the board. For more information, see Texas Instruments literature number SLUA271 (www.ti.com/lit/slua271).
7. Vias are optional depending on application, refer to device data sheet. If any vias are implemented, refer to their locations shown on this view. It is recommended that vias under paste be filled, plugged or tented.

Copyright © 2024 Texas Instruments Incorporated

EXAMPLE STENCIL DESIGN

DEF0008A-C01

WSON - 0.8 mm max height

PLASTIC SMALL OUTLINE - NO LEAD

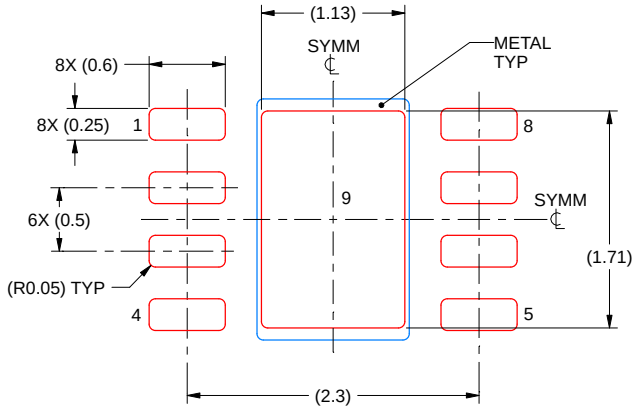

SOLDER PASTE EXAMPLE
BASED ON 0.125 mm THICK STENCIL

EXPOSED PAD 7:
85% PRINTED SOLDER COVERAGE BY AREA UNDER PACKAGE
SCALE:20X

4228892/B 08/2022

NOTES: (continued)

8. Laser cutting apertures with trapezoidal walls and rounded corners may o□er better paste release. IPC-7525 may have alternate design recommendations.

Copyright © 2024 Texas Instruments Incorporated

PACKAGE OUTLINE

DEH0008A-C01

WSON - 1.04 mm max height

PLASTIC SMALL OUTLINE - NO LEAD

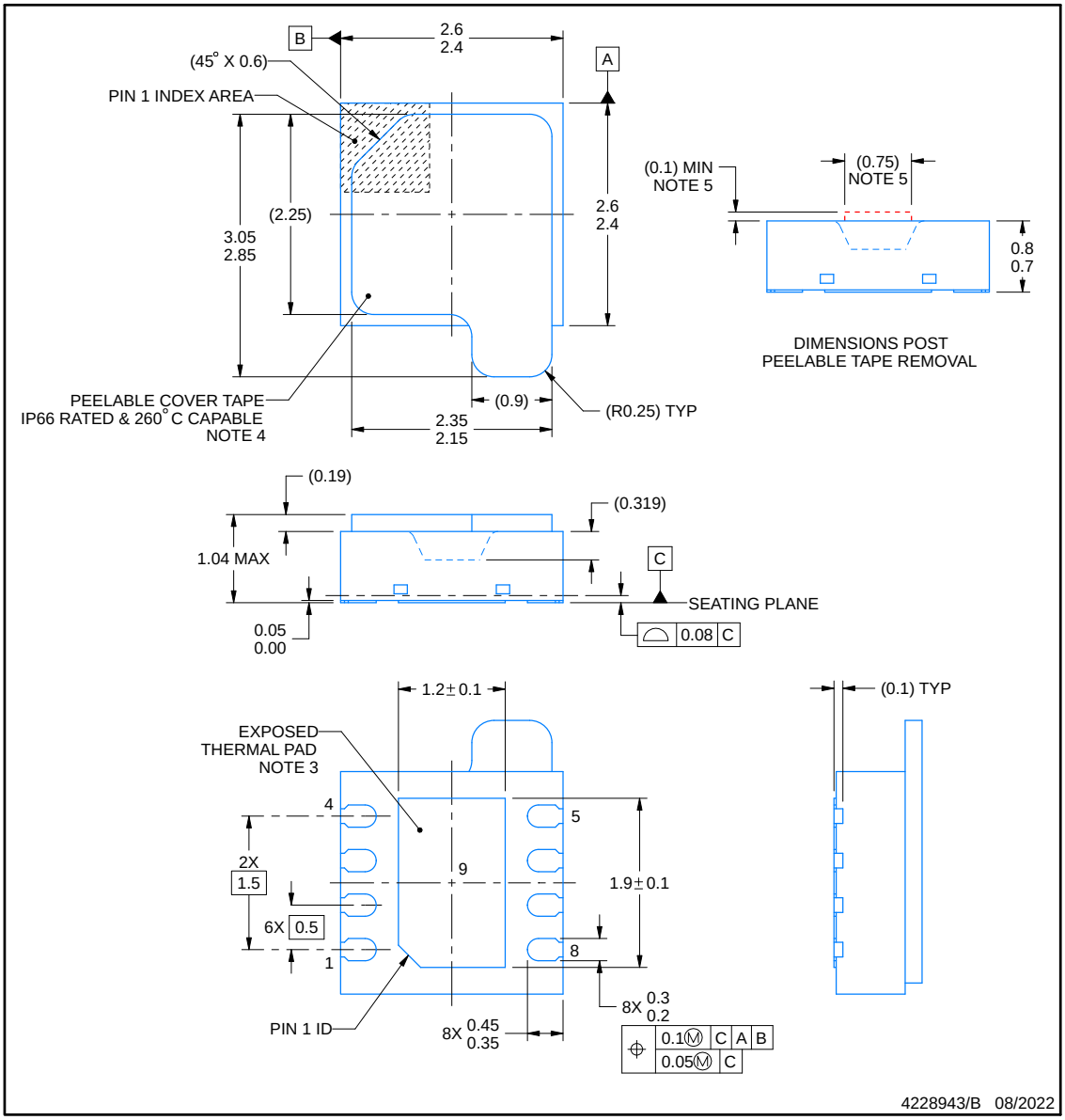

NOTES:

1. All linear dimensions are in millimeters. Any dimensions in parenthesis are for reference only. Dimensioning and tolerancing per ASME Y14.5M.
2. This drawing is subject to change without notice.
3. It is generally best practice to solder the package thermal pad to a board pad that is connected to ground, however to minimize thermal mass for maximum heater e□ciency or to measure ambient temperature it may be left floating.
4. IPXY Rating represents environmental ingress protection from both dust and high pressure water sprays. X=6 represents resistance to dust and Y=6 represents high pressure water spray resistance per IEC60529 testing conditions.
5. Customers must maintain adequate clearance from this region to allow for proper functioning of the humidity sensor.

Copyright © 2024 Texas Instruments Incorporated

EXAMPLE BOARD LAYOUT

DEH0008A-C01

WSON - 1.04 mm max height

PLASTIC SMALL OUTLINE - NO LEAD

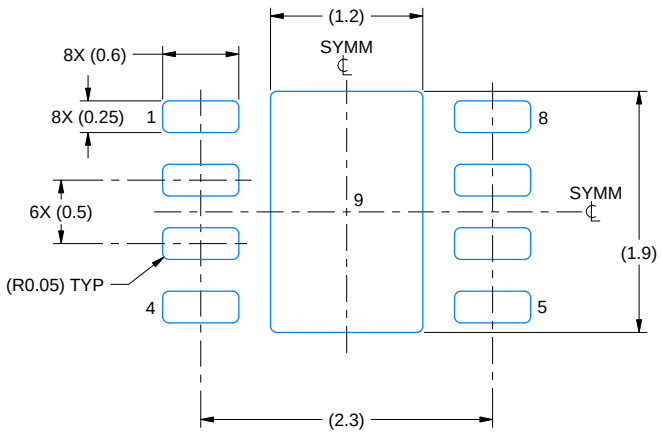

LAND PATTERN EXAMPLE
EXPOSED METAL SHOWN
SCALE:20X

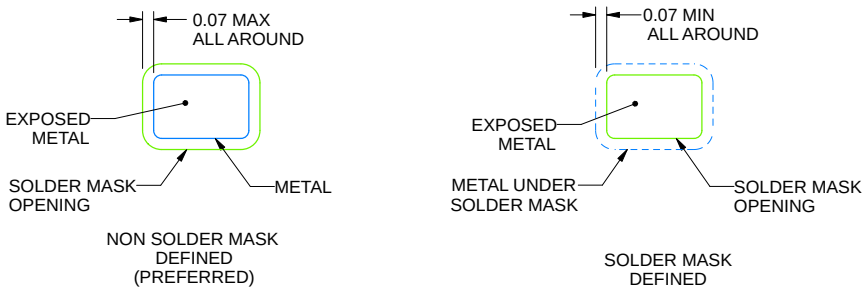

SOLDER MASK DETAILS

4228943/B 08/2022

NOTES: (continued)

6. This package is designed to be soldered to a thermal pad on the board. For more information, see Texas Instruments literature number SLUA271 (www.ti.com/lit/slua271).
7. Vias are optional depending on application, refer to device data sheet. If any vias are implemented, refer to their locations shown on this view. It is recommended that vias under paste be filled, plugged or tented.

Copyright © 2024 Texas Instruments Incorporated

EXAMPLE STENCIL DESIGN

DEH0008A-C01

WSON - 1.04 mm max height

PLASTIC SMALL OUTLINE - NO LEAD

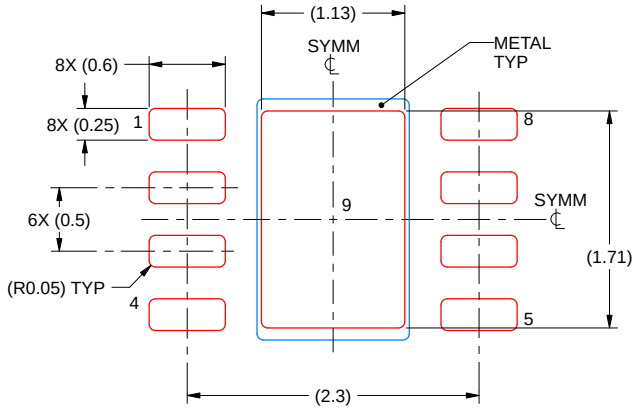

SOLDER PASTE EXAMPLE
BASED ON 0.125 mm THICK STENCIL

EXPOSED PAD 7:
85% PRINTED SOLDER COVERAGE BY AREA UNDER PACKAGE
SCALE:20X

4228943/B 08/2022

NOTES: (continued)

8. Laser cutting apertures with trapezoidal walls and rounded corners may o□er better paste release. IPC-7525 may have alternate design recommendations.

Copyright © 2024 Texas Instruments Incorporated

PACKAGE OUTLINE

DEJ0008A-C01

WSON - 1.25 mm max height

PLASTIC SMALL OUTLINE - NO LEAD

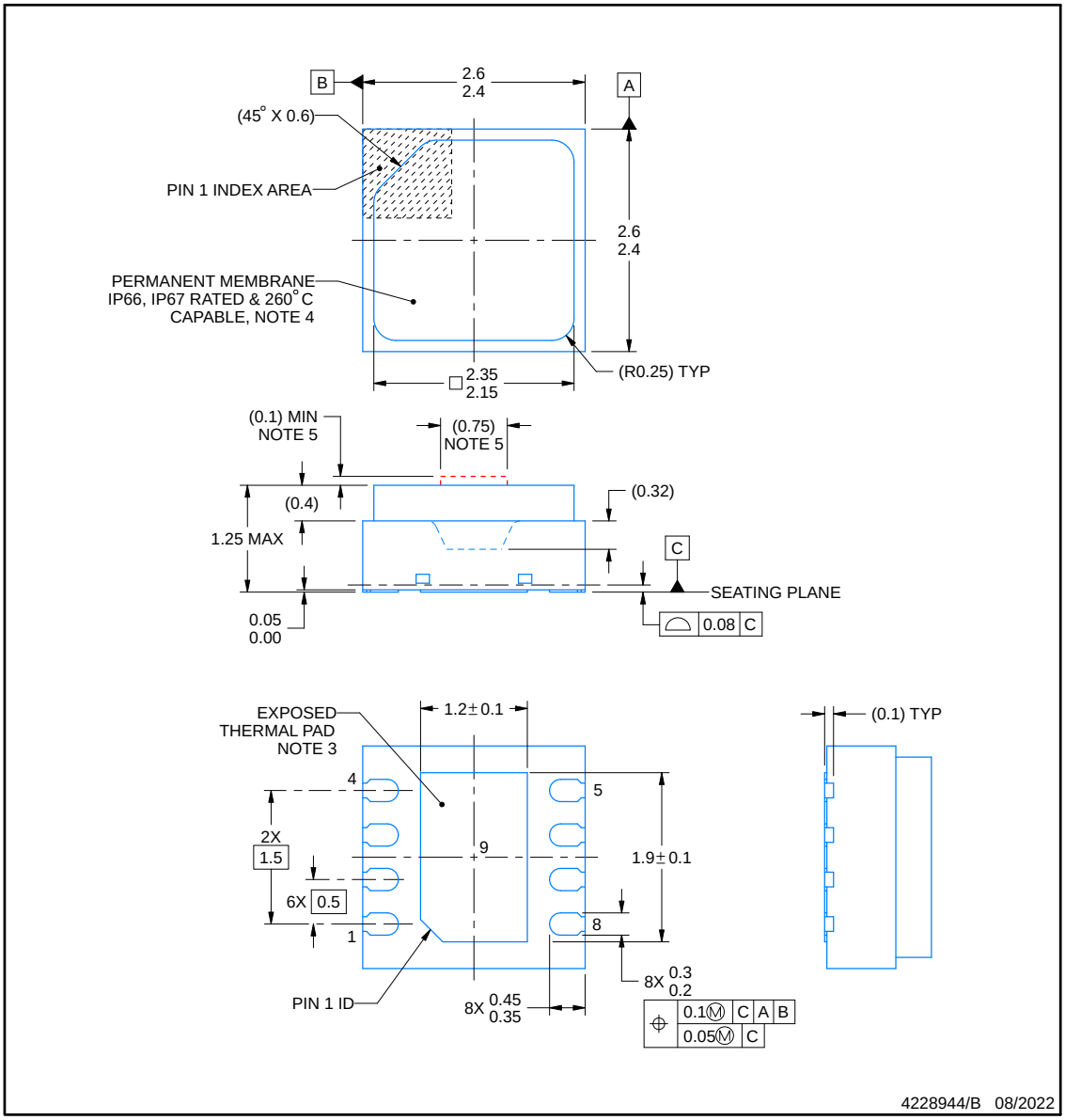

NOTES:

1. All linear dimensions are in millimeters. Any dimensions in parenthesis are for reference only. Dimensioning and tolerancing per ASME Y14.5M.
2. This drawing is subject to change without notice.
3. It is generally best practice to solder the package thermal pad to a board pad that is connected to ground, however to minimize thermal mass for maximum heater e□ciency or to measure ambient temperature it may be left floating.
4. IPXY Rating represents environmental ingress protection from both dust and high pressure water sprays. X=6 represents resistance to dust, Y=6 represents high pressure water spray resistance and Y=7 allows 1m water submersion per IEC60529 testing conditions.
5. Customers must maintain adequate clearance from this region to allow for proper functioning of the humidity sensor.

Copyright © 2024 Texas Instruments Incorporated

EXAMPLE BOARD LAYOUT

DEJ0008A-C01

WSON - 1.25 mm max height

PLASTIC SMALL OUTLINE - NO LEAD

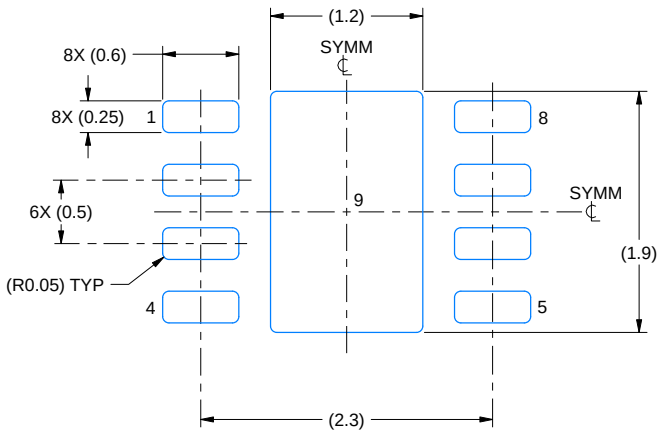

LAND PATTERN EXAMPLE
EXPOSED METAL SHOWN
SCALE:20X

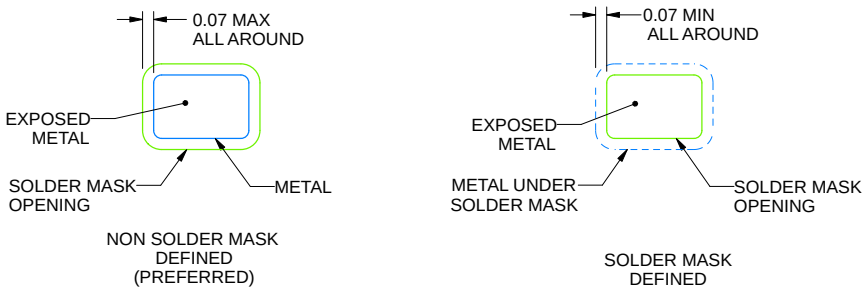

SOLDER MASK DETAILS

4228944/B 08/2022

NOTES: (continued)

6. This package is designed to be soldered to a thermal pad on the board. For more information, see Texas Instruments literature number SLUA271 (www.ti.com/lit/slua271).
7. Vias are optional depending on application, refer to device data sheet. If any vias are implemented, refer to their locations shown on this view. It is recommended that vias under paste be filled, plugged or tented.

Copyright © 2024 Texas Instruments Incorporated

EXAMPLE STENCIL DESIGN

DEJ0008A-C01

WSON - 1.25 mm max height

PLASTIC SMALL OUTLINE - NO LEAD

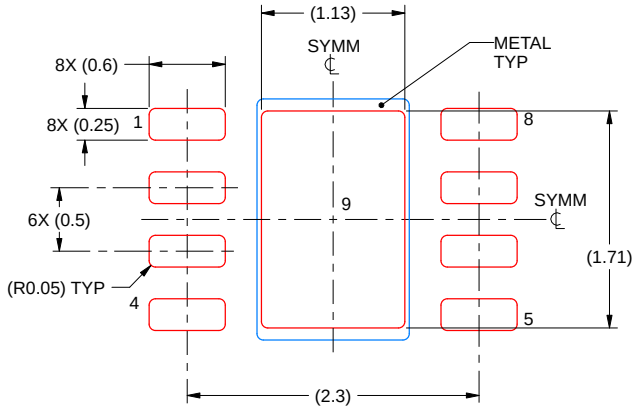

SOLDER PASTE EXAMPLE
BASED ON 0.125 mm THICK STENCIL

EXPOSED PAD 7:
85% PRINTED SOLDER COVERAGE BY AREA UNDER PACKAGE
SCALE:20X

4228944/B 08/2022

NOTES: (continued)

8. Laser cutting apertures with trapezoidal walls and rounded corners may o□er better paste release. IPC-7525 may have alternate design recommendations.

Copyright © 2024 Texas Instruments Incorporated

PACKAGING INFORMATION

Orderable Device	Status (1)	Package Type	Package Drawing	Pins	Package Qty	Eco Plan (2)	Lead finish/ Ball material (6)	MSL Peak Temp (3)	Op Temp (°C)	Device Marking (4/5)	Samples
HDC3020DEFR	ACTIVE	WSON	DEF	8	3000	RoHS & Green	NIPDAU	Level-1-260C-UNLIM	-40 to 125	P G	Samples
HDC3021DEHR	ACTIVE	WSON	DEH	8	3000	RoHS & Green	NIPDAU	Level-1-260C-UNLIM	-40 to 125	P H	Samples
HDC3022DEJR	ACTIVE	WSON	DEJ	8	3000	RoHS & Green	NIPDAU	Level-1-260C-UNLIM	-40 to 125	P J	Samples

(1) The marketing status values are defined as follows:
ACTIVE: Product device recommended for new designs.
LIFEBUY: TI has announced that the device will be discontinued, and a lifetime-buy period is in effect.
NRND: Not recommended for new designs. Device is in production to support existing customers, but TI does not recommend using this part in a new design.
PREVIEW: Device has been announced but is not in production. Samples may or may not be available.
OBSOLETE: TI has discontinued the production of the device.

(2) **RoHS:** TI defines "RoHS" to mean semiconductor products that are compliant with the current EU RoHS requirements for all 10 RoHS substances, including the requirement that RoHS substance do not exceed 0.1% by weight in homogeneous materials. Where designed to be soldered at high temperatures, "RoHS" products are suitable for use in specified lead-free processes. TI may reference these types of products as "Pb-Free".
RoHS Exempt: TI defines "RoHS Exempt" to mean products that contain lead but are compliant with EU RoHS pursuant to a specific EU RoHS exemption.
Green: TI defines "Green" to mean the content of Chlorine (Cl) and Bromine (Br) based flame retardants meet JS709B low halogen requirements of <=1000ppm threshold. Antimony trioxide based flame retardants must also meet the <=1000ppm threshold requirement.

(3) MSL, Peak Temp. - The Moisture Sensitivity Level rating according to the JEDEC industry standard classifications, and peak solder temperature.

(4) There may be additional marking, which relates to the logo, the lot trace code information, or the environmental category on the device.

(5) Multiple Device Markings will be inside parentheses. Only one Device Marking contained in parentheses and separated by a "~" will appear on a device. If a line is indented then it is a continuation of the previous line and the two combined represent the entire Device Marking for that device.

(6) Lead finish/Ball material - Orderable Devices may have multiple material finish options. Finish options are separated by a vertical ruled line. Lead finish/Ball material values may wrap to two lines if the finish value exceeds the maximum column width.

Important Information and Disclaimer: The information provided on this page represents TI's knowledge and belief as of the date that it is provided. TI bases its knowledge and belief on information provided by third parties, and makes no representation or warranty as to the accuracy of such information. Efforts are underway to better integrate information from third parties. TI has taken and continues to take reasonable steps to provide representative and accurate information but may not have conducted destructive testing or chemical analysis on incoming materials and chemicals. TI and TI suppliers consider certain information to be proprietary, and thus CAS numbers and other limited information may not be available for release.

In no event shall TI's liability arising out of such information exceed the total purchase price of the TI part(s) at issue in this document sold by TI to Customer on an annual basis.

OTHER QUALIFIED VERSIONS OF HDC3020, HDC3021, HDC3022 :

- Automotive : HDC3020-Q1, HDC3021-Q1, HDC3022-Q1

NOTE: Qualified Version Definitions:

- Automotive - Q100 devices qualified for high-reliability automotive applications targeting zero defects

IMPORTANT NOTICE AND DISCLAIMER

TI PROVIDES TECHNICAL AND RELIABILITY DATA (INCLUDING DATA SHEETS), DESIGN RESOURCES (INCLUDING REFERENCE DESIGNS), APPLICATION OR OTHER DESIGN ADVICE, WEB TOOLS, SAFETY INFORMATION, AND OTHER RESOURCES “AS IS” AND WITH ALL FAULTS, AND DISCLAIMS ALL WARRANTIES, EXPRESS AND IMPLIED, INCLUDING WITHOUT LIMITATION ANY IMPLIED WARRANTIES OF MERCHANTABILITY, FITNESS FOR A PARTICULAR PURPOSE OR NON-INFRINGEMENT OF THIRD PARTY INTELLECTUAL PROPERTY RIGHTS.

These resources are intended for skilled developers designing with TI products. You are solely responsible for (1) selecting the appropriate TI products for your application, (2) designing, validating and testing your application, and (3) ensuring your application meets applicable standards, and any other safety, security, regulatory or other requirements.

These resources are subject to change without notice. TI grants you permission to use these resources only for development of an application that uses the TI products described in the resource. Other reproduction and display of these resources is prohibited. No license is granted to any other TI intellectual property right or to any third party intellectual property right. TI disclaims responsibility for, and you will fully indemnify TI and its representatives against, any claims, damages, costs, losses, and liabilities arising out of your use of these resources.

TI’s products are provided subject to TI’s Terms of Sale or other applicable terms available either on ti.com or provided in conjunction with such TI products. TI’s provision of these resources does not expand or otherwise alter TI’s applicable warranties or warranty disclaimers for TI products.

TI objects to and rejects any additional or different terms you may have proposed.

Mailing Address: Texas Instruments, Post Office Box 655303, Dallas, Texas 75265
Copyright © 2024, Texas Instruments Incorporated